# SECTION BL

# BODY, LOCK & SECURITY SYSTEM

## CONTENTS

# PRECAUTIONS

PFP:00001

## Precautions for Supplemental Restraint System (SRS) “AIR BAG” and “SEAT BELT PRE-TENSIONER”

EIS003Q1

The Supplemental Restraint System such as “AIR BAG” and “SEAT BELT PRE-TENSIONER”, used along with a front seat belt, helps to reduce the risk or severity of injury to the driver and front passenger for certain types of collision. This system includes seat belt switch inputs and dual stage front air bag modules. The SRS system uses the seat belt switches to determine the front air bag deployment, and may only deploy one front air bag, depending on the severity of a collision and whether the front occupants are belted or unbelted.
Information necessary to service the system safely is included in the SRS and SB section of this Service Manual.

**WARNING:**

- **To avoid rendering the SRS inoperative, which could increase the risk of personal injury or death in the event of a collision which would result in air bag inflation, all maintenance must be performed by an authorized NISSAN/INFINITI dealer.**
- **Improper maintenance, including incorrect removal and installation of the SRS, can lead to personal injury caused by unintentional activation of the system. For removal of Spiral Cable and Air Bag Module, see the SRS section.**
- **Do not use electrical test equipment on any circuit related to the SRS unless instructed to in this Service Manual. SRS wiring harnesses can be identified by yellow and/or orange harnesses or harness connectors.**

## Precautions for work

EIS003Q2

- After removing and installing the opening/closing parts, be sure to carry out fitting adjustments to check their operation.
- Check the lubrication level, damage, and wear of each part. If necessary, grease or replace it.

# PREPARATION

PFP:00002

## Special service tool

EIS003Q4

The actual shapes of Kent-Moore tools may differ from those of special service tools illustrated here.

| Tool number<br>(Kent-Moore No.)<br>Tool name | | Description |
|---|---|---|
| —<br>(J-39570)<br>Chassis ear | 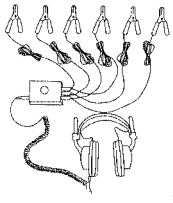 <br>SIIA0993E | Locating the noise |
| —<br>(J-43980)<br>NISSAN Squeak and Rattle Kit | 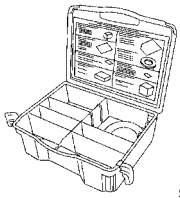 <br>SIIA0994E | Repairing the cause of noise |
| —<br>(J-43241)<br>Remote Keyless Entry Tester | 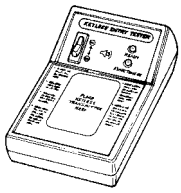 <br>LEL946A | Used to test key fobs |

## Commercial Service Tool

EIS003Q5

| (Kent-Moore No.)<br>Tool name | | Description |
|---|---|---|
| (J-39565)<br>Engine ear | 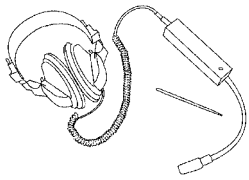 <br>SIIA0995E | Locating the noise |

# SQUEAK AND RATTLE TROUBLE DIAGNOSES

PFP:00000

## Work Flow

EIS0047C

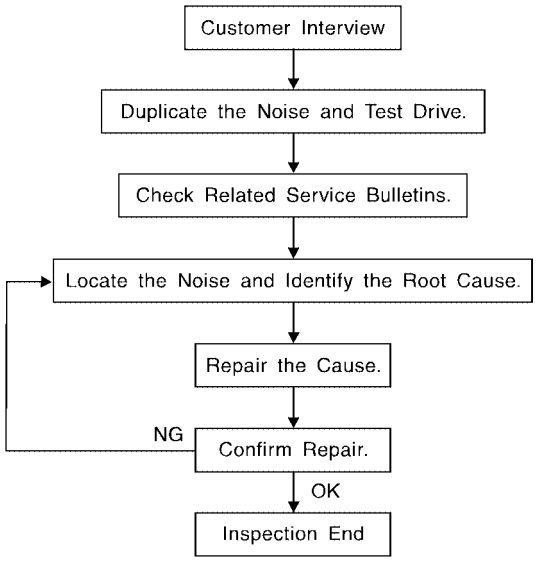


SBT842

### CUSTOMER INTERVIEW

Interview the customer if possible, to determine the conditions that exist when the noise occurs. Use the Diagnostic Worksheet during the interview to document the facts and conditions when the noise occurs and any customer's comments; refer to BL-10, "Diagnostic Worksheet" . This information is necessary to duplicate the conditions that exist when the noise occurs.

- The customer may not be able to provide a detailed description or the location of the noise. Attempt to obtain all the facts and conditions that exist when the noise occurs (or does not occur).
- If there is more than one noise in the vehicle, be sure to diagnose and repair the noise that the customer is concerned about. This can be accomplished by test driving the vehicle with the customer.
- After identifying the type of noise, isolate the noise in terms of its characteristics. The noise characteristics are provided so the customer, service adviser and technician are all speaking the same language when defining the noise.
- Squeak —(Like tennis shoes on a clean floor)
  Squeak characteristics include the light contact/fast movement/brought on by road conditions/hard surfaces = higher pitch noise/softer surfaces = lower pitch noises/edge to surface = chirping.
- Creak—(Like walking on an old wooden floor)
  Creak characteristics include firm contact/slow movement/twisting with a rotational movement/pitch dependent on materials/often brought on by activity.
- Rattle—(Like shaking a baby rattle)
  Rattle characteristics include the fast repeated contact/vibration or similar movement/loose parts/missing clip or fastener/incorrect clearance.
- Knock —(Like a knock on a door)
  Knock characteristics include hollow sounding/sometimes repeating/often brought on by driver action.
- Tick—(Like a clock second hand)
  Tick characteristics include gentle contacting of light materials/loose components/can be caused by driver action or road conditions.
- Thump—(Heavy, muffled knock noise)
  Thump characteristics include softer knock/dead sound often brought on by activity.
- Buzz—(Like a bumble bee)
  Buzz characteristics include high frequency rattle/firm contact.
- Often the degree of acceptable noise level will vary depending upon the person. A noise that you may judge as acceptable may be very irritating to the customer.
- Weather conditions, especially humidity and temperature, may have a great effect on noise level.

## DUPLICATE THE NOISE AND TEST DRIVE

If possible, drive the vehicle with the customer until the noise is duplicated. Note any additional information on the Diagnostic Worksheet regarding the conditions or location of the noise. This information can be used to duplicate the same conditions when you confirm the repair.
If the noise can be duplicated easily during the test drive, to help identify the source of the noise, try to duplicate the noise with the vehicle stopped by doing one or all of the following:

1) Close a door.
2) Tap or push/pull around the area where the noise appears to be coming from.
3) Rev the engine.
4) Use a floor jack to recreate vehicle “twist”.
5) At idle, apply engine load (electrical load, half-clutch on M/T model, drive position on A/T model).
6) Raise the vehicle on a hoist and hit a tire with a rubber hammer.

- Drive the vehicle and attempt to duplicate the conditions the customer states exist when the noise occurs.
- If it is difficult to duplicate the noise, drive the vehicle slowly on an undulating or rough road to stress the vehicle body.

## CHECK RELATED SERVICE BULLETINS

After verifying the customer concern or symptom, check ASIST for Technical Service Bulletins (TSBs) related to that concern or symptom.
If a TSB relates to the symptom, follow the procedure to repair the noise.

## LOCATE THE NOISE AND IDENTIFY THE ROOT CAUSE

1. Narrow down the noise to a general area.To help pinpoint the source of the noise, use a listening tool (Chassis Ear: J-39570, Engine Ear: J-39565 and mechanic's stethoscope).
2. Narrow down the noise to a more specific area and identify the cause of the noise by:

- removing the components in the area that you suspect the noise is coming from.
  Do not use too much force when removing clips and fasteners, otherwise clips and fasteners can be broken or lost during the repair, resulting in the creation of new noise.
- tapping or pushing/pulling the component that you suspect is causing the noise.
  Do not tap or push/pull the component with excessive force, otherwise the noise will be eliminated only temporarily.
- feeling for a vibration with your hand by touching the component(s) that you suspect is (are) causing the noise.
- placing a piece of paper between components that you suspect are causing the noise.
- looking for loose components and contact marks.
  Refer to BL-8, "Generic Squeak and Rattle Troubleshooting" .

## REPAIR THE CAUSE

- If the cause is a loose component, tighten the component securely.
- If the cause is insufficient clearance between components:
  - separate components by repositioning or loosening and retightening the component, if possible.
  - insulate components with a suitable insulator such as urethane pads, foam blocks, felt cloth tape or urethane tape. A NISSAN Squeak and Rattle Kit (J-43980) is available through your authorized NISSAN Parts Department.

**CAUTION:**
**Do not use excessive force as many components are constructed of plastic and may be damaged.**
**Always check with the Parts Department for the latest parts information.**
**The following materials are contained in the NISSAN Squeak and Rattle Kit (J-43980). Each item can be ordered separately as needed.**
**URETHANE PADS [1.5 mm (0.059 in) thick]**
**Insulates connectors, harness, etc.**
**76268-9E005: 100×135 mm (3.94×5.31 in)/76884-71L01: 60×85 mm (2.36×3.35 in)/76884-71L02: 15×25 mm (0.59×0.98 in)**
**INSULATOR (Foam blocks)**
**Insulates components from contact. Can be used to fill space behind a panel.**
**73982-9E000: 45 mm (1.77 in) thick, 50×50 mm (1.97×1.97 in)/73982-50Y00: 10 mm (0.39 in) thick, 50×50 mm (1.97×1.97 in)**
**INSULATOR (Light foam block)**

**80845-71L00: 30 mm (1.18 in) thick, 30×50 mm (1.18×1.97 in)**
**FELT CLOTH TAPE**
**Used to insulate where movement does not occur. Ideal for instrument panel applications.**
**68370-4B000: 15×25 mm (0.59×0.98 in) pad/68239-13E00: 5 mm (0.20 in) wide tape roll. The following materials not found in the kit can also be used to repair squeaks and rattles.**
**UHMW (TEFLON) TAPE**
**Insulates where slight movement is present. Ideal for instrument panel applications.**
**SILICONE GREASE**
**Used instead of UHMW tape that will be visible or not fit.**
**Note: Will only last a few months.**
**SILICONE SPRAY**
**Use when grease cannot be applied.**
**DUCT TAPE**
**Use to eliminate movement.**

### CONFIRM THE REPAIR

Confirm that the cause of a noise is repaired by test driving the vehicle. Operate the vehicle under the same conditions as when the noise originally occurred. Refer to the notes on the Diagnostic Worksheet.

## Generic Squeak and Rattle Troubleshooting

*EIS0047D*

Refer to Table of Contents for specific component removal and installation information.

### INSTRUMENT PANEL

Most incidents are caused by contact and movement between:

1. The cluster lid A and instrument panel
2. Acrylic lens and combination meter housing
3. Instrument panel to front pillar garnish
4. Instrument panel to windshield
5. Instrument panel mounting pins
6. Wiring harnesses behind the combination meter
7. A/C defroster duct and duct joint

These incidents can usually be located by tapping or moving the components to duplicate the noise or by pressing on the components while driving to stop the noise. Most of these incidents can be repaired by applying felt cloth tape or silicone spray (in hard to reach areas). Urethane pads can be used to insulate wiring harness.

**CAUTION:**
**Do not use silicone spray to isolate a squeak or rattle. If you saturate the area with silicone, you will not be able to recheck the repair.**

### CENTER CONSOLE

Components to pay attention to include:

1. Shifter assembly cover to finisher
2. A/C control unit and cluster lid C
3. Wiring harnesses behind audio and A/C control unit

The instrument panel repair and isolation procedures also apply to the center console.

### DOORS

Pay attention to the:

1. Finisher and inner panel making a slapping noise
2. Inside handle escutcheon to door finisher
3. Wiring harnesses tapping
4. Door striker out of alignment causing a popping noise on starts and stops

Tapping or moving the components or pressing on them while driving to duplicate the conditions can isolate many of these incidents. You can usually insulate the areas with felt cloth tape or insulator foam blocks from the NISSAN Squeak and Rattle Kit (J-43980) to repair the noise.

## TRUNK

Trunk noises are often caused by a loose jack or loose items put into the trunk by the owner.
In addition look for:

1. Trunk lid bumpers out of adjustment
2. Trunk lid striker out of adjustment
3. The trunk lid torsion bars knocking together
4. A loose license plate or bracket

Most of these incidents can be repaired by adjusting, securing or insulating the item(s) or component(s) causing the noise.

## SUNROOF/HEADLINING

Noises in the sunroof/headlining area can often be traced to one of the following:

1. Sunroof lid, rail, linkage or seals making a rattle or light knocking noise
2. Sun visor shaft shaking in the holder
3. Front or rear windshield touching headliner and squeaking

Again, pressing on the components to stop the noise while duplicating the conditions can isolate most of these incidents. Repairs usually consist of insulating with felt cloth tape.

## OVERHEAD CONSOLE (FRONT AND REAR)

Overhead console noises are often caused by the console panel clips not being engaged correctly. Most of these incidents are repaired by pushing up on the console at the clip locations until the clips engage.
In addition look for:

1. Loose harness or harness connectors.
2. Front console map/reading lamp lense loose.
3. Loose screws at console attachment points.

## SEATS

When isolating seat noise it's important to note the position the seat is in and the load placed on the seat when the noise is present. These conditions should be duplicated when verifying and isolating the cause of the noise.
Cause of seat noise include:

1. Headrest rods and holder
2. A squeak between the seat pad cushion and frame
3. The rear seatback lock and bracket

These noises can be isolated by moving or pressing on the suspected components while duplicating the conditions under which the noise occurs. Most of these incidents can be repaired by repositioning the component or applying urethane tape to the contact area.

## UNDERHOOD

Some interior noise may be caused by components under the hood or on the engine wall. The noise is then transmitted into the passenger compartment.
Causes of transmitted underhood noise include:

1. Any component mounted to the engine wall
2. Components that pass through the engine wall
3. Engine wall mounts and connectors
4. Loose radiator mounting pins
5. Hood bumpers out of adjustment
6. Hood striker out of adjustment

These noises can be difficult to isolate since they cannot be reached from the interior of the vehicle. The best method is to secure, move or insulate one component at a time and test drive the vehicle. Also, engine RPM or load can be changed to isolate the noise. Repairs can usually be made by moving, adjusting, securing, or insulating the component causing the noise.

## Diagnostic Worksheet

EIS0047E

### SQUEAK & RATTLE DIAGNOSTIC WORKSHEET

Dear Nissan Customer:
We are concerned about your satisfaction with your Nissan vehicle. Repairing a squeak or rattle sometimes can be very difficult. To help us fix your Nissan right the first time, please take a moment to note the area of the vehicle where the squeak or rattle occurs and under what conditions. You may be asked to take a test drive with a service advisor or technician to ensure we confirm the noise you are hearing.

**I. WHERE DOESTHE NOISE COME FROM? (circle the area of the vehicle)**
The illustrations are for reference only, and may not reflect the actual configuration of your vehicle.

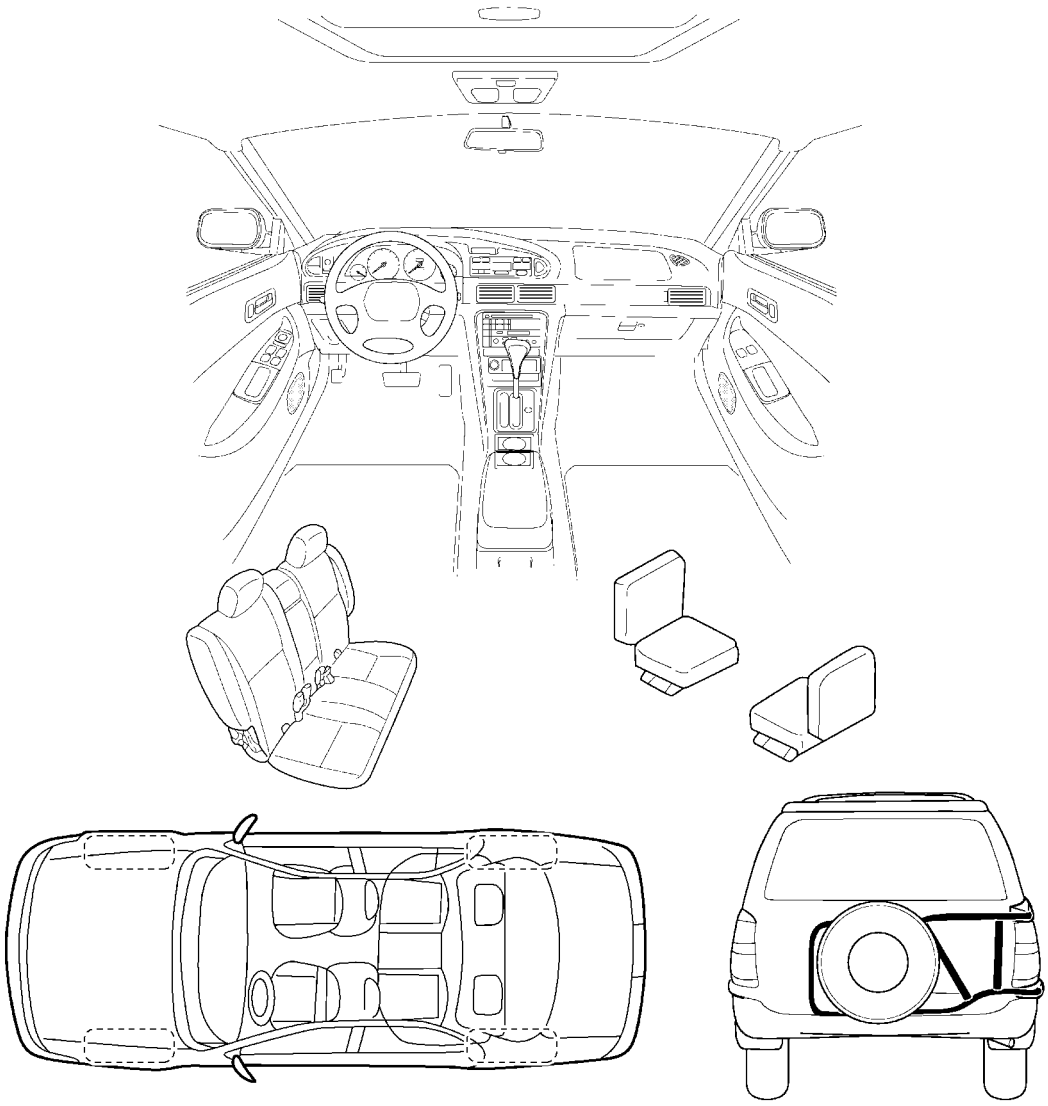

**Continue to the back of the worksheet and briefly describe the location of the noise or rattle. In addition, please indicate the conditions which are present when the noise occurs.**

LIWA0276E

## SQUEAK & RATTLE DIAGNOSTIC WORKSHEET- page 2

**Briefly describe the location where the noise occurs:**

_____

_____

### II. WHEN DOES IT OCCUR? (check the boxes that apply)

- ❑ anytime
- ❑ 1st time in the morning
- ❑ only when it is cold outside
- ❑ only when it is hot outside
- ❑ after sitting out in the sun
- ❑ when it is raining or wet
- ❑ dry or dusty conditions
- ❑ other: _____

### III. WHEN DRIVING:

- ❑ through driveways
- ❑ over rough roads
- ❑ over speed bumps
- ❑ only at about ____ mph
- ❑ on acceleration
- ❑ coming to a stop
- ❑ on turns : left, right or either (circle)
- ❑ with passengers or cargo
- ❑ other: _____
- ❑ after driving ____ miles or ____ minutes

### IV. WHAT TYPE OF NOISE?

- ❑ squeak (like tennis shoes on a clean floor)
- ❑ creak (like walking on an old wooden floor)
- ❑ rattle (like shaking a baby rattle)
- ❑ knock (like a knock on a door)
- ❑ tick (like a clock second hand)
- ❑ thump (heavy, muffled knock noise)
- ❑ buzz (like a bumble bee)

**TO BE COMPLETED BY DEALERSHIP PERSONNEL**
**Test Drive Notes:**

_____

_____

| | YES | NO | Initials of person performing |
|---|---|---|---|
| Vehicle test driven with customer | ❑ | ❑ | _____ |
| - Noise verified on test drive | ❑ | ❑ | |
| - Noise source located and repaired | ❑ | ❑ | _____ |
| - Follow up test drive performed to confirm repair | ❑ | ❑ | _____ |

VIN: _____ Customer Name: _____

W.O. #: _____ Date: _____

SBT844

**This form must be attached to Work Order**

# HOOD

PFP:F5100

## Fitting Adjustment

EIS0047G

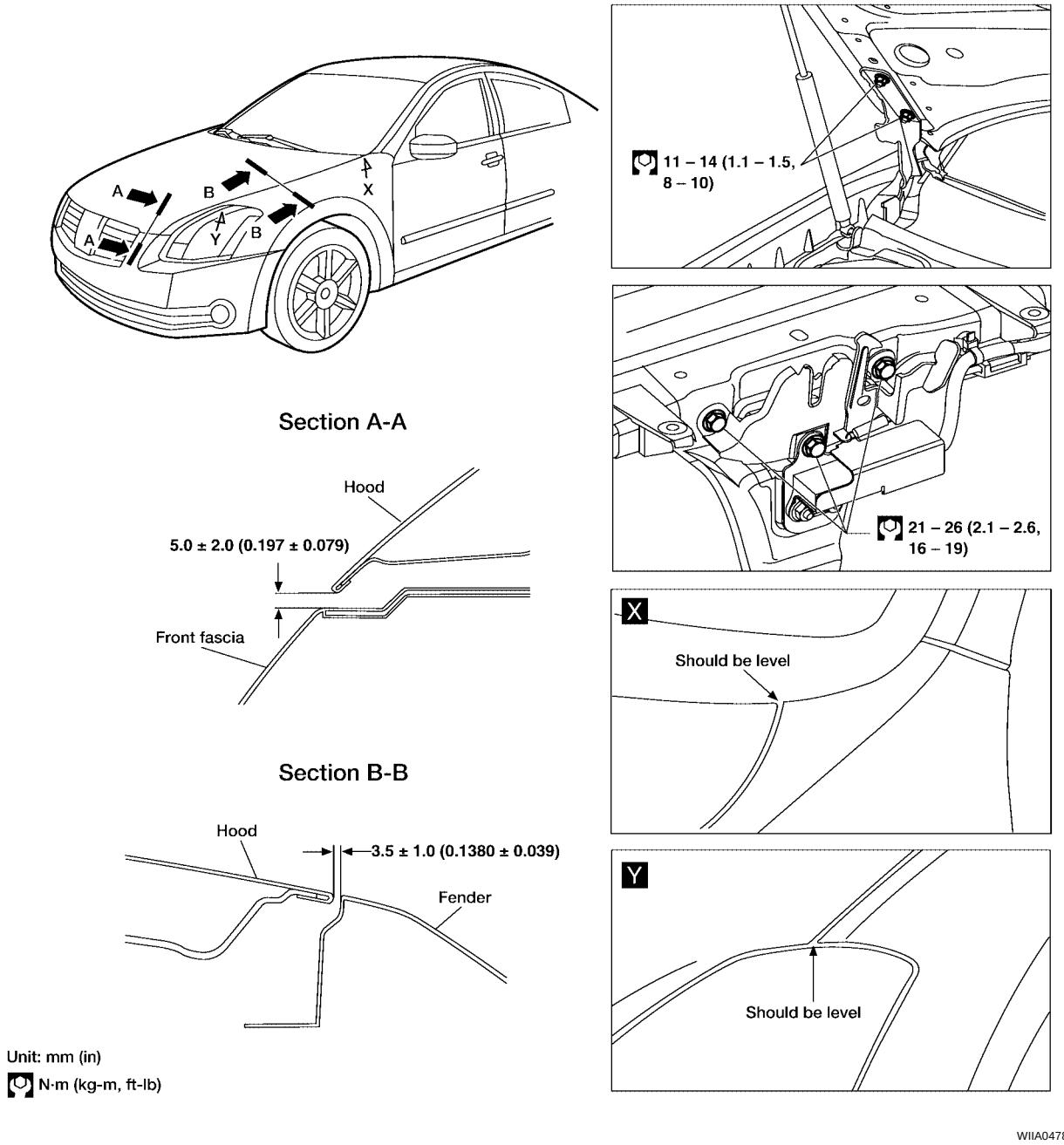


WIIA0478E

### FRONT END HEIGHT ADJUSTMENT AND LATERAL/LONGITUDINAL CLEARANCE ADJUSTMENT.

1. Remove the radiator grille. Refer to EI-18, "Removal and Installation" .
2. Loosen the hood lock temporarily, and align the hood striker and lock so that the centers of striker and lock become vertically aligned as viewed from the front, by moving the hood lock laterally.
3. Tighten the hood lock bolts to the specified torque.

4. Check that the secondary latch is properly engaged with the secondary striker with hood's own weight by dropping it from approx. 200 mm (7.87 in) height or by pressing it lightly approx. 3 kg (29 N).

   **CAUTION:**
   **Do not drop the hood from 300 mm (11.81 in) height or higher.**

5. If necessary, loosen the hood lock bolts and move the hood lock up or down so that the striker and lock are engaged firmly with the hood closed.
6. Tighten the hood lock bolts to the specified torque.
7. Install the radiator grille. Refer to EI-18, "Removal and Installation" .

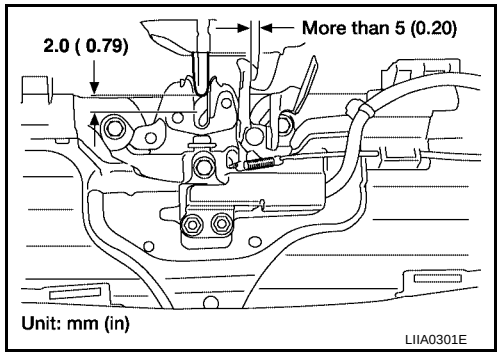


## Removal and Installation of Hood Assembly

EIS0047H

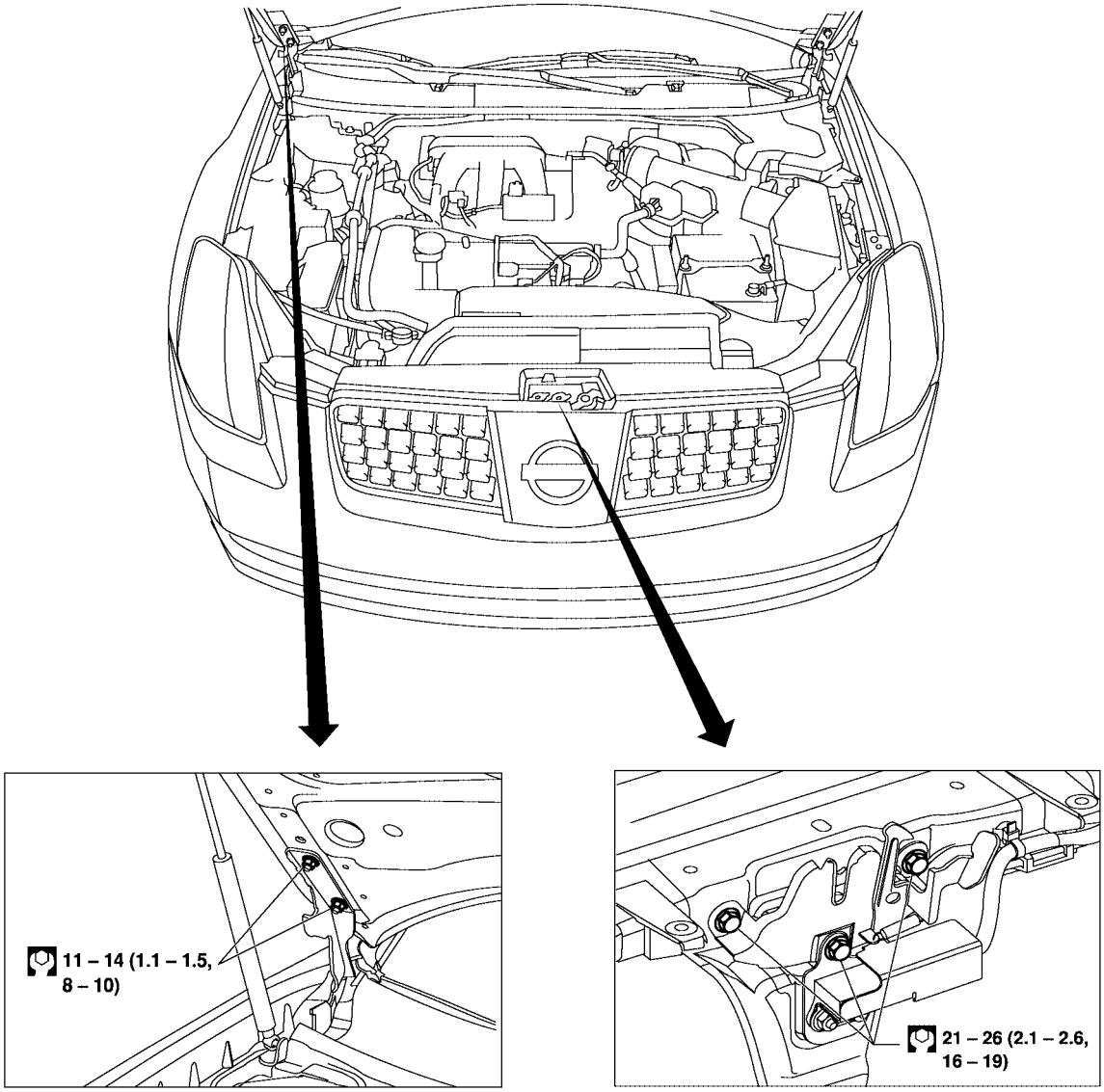


N·m (kg-m, ft-lb)

LIIA0302E

1. Support the hood with suitable tool.
2. Separate the hood stays from the hood.
3. Remove the hood assembly.

Installation is in the reverse order of removal.

**NOTE:**
Align the hood. Refer to BL-12, "Fitting Adjustment" .

## Removal and Installation of Hood Lock Control

EIS0047I

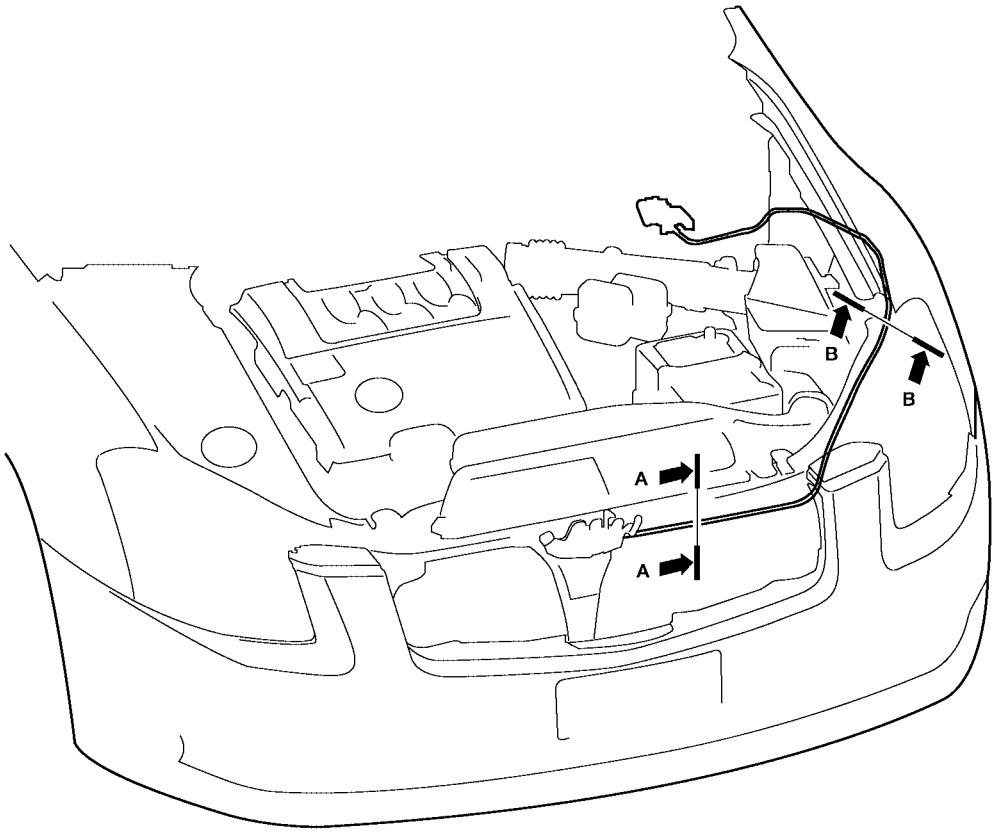


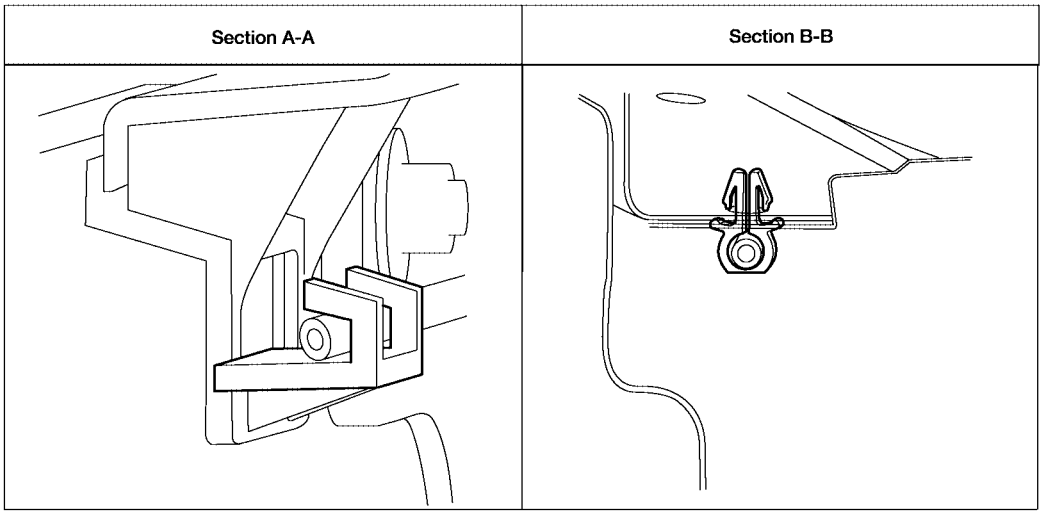


LIIA0303E

## REMOVAL

1. Disconnect the hood lock cable from the hood lock, and un-clip it from the radiator core upper support and hoodledge.
2. Remove the screws and the hood opener.
3. Remove the grommet on the instrument panel, and pull the hood lock cable into the passenger compartment.

   **CAUTION:**
   **While pulling, be careful not to damage (peeling) the outside of the hood lock cable.**

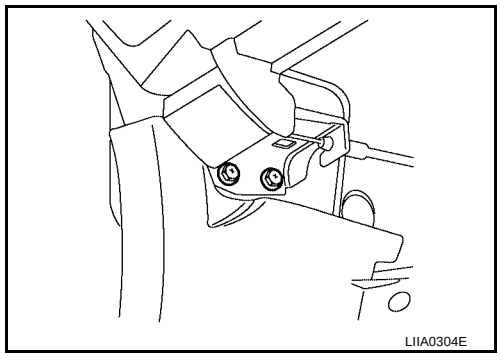


## INSTALLATION

1. Pull the hood lock cable through the lower dash hole into the engine compartment. Be careful not to bend the cable too much, keeping the radius 100 mm (3.94 in) or more.
2. Check that the cable is not offset from the positioning grommet, and push the grommet into the panel hole securely.
3. Apply the sealant around the grommet (at * mark).

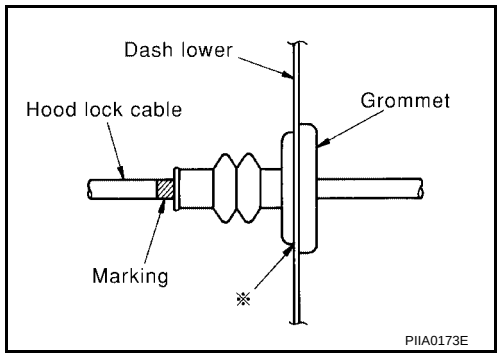


4. Attach the cable securely to the lock.
5. After installing, check the hood lock adjustment and hood opener operation. Refer to BL-15, "Hood Lock Control Inspection" .

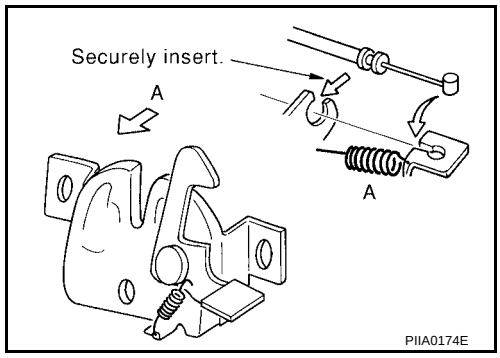


## Hood Lock Control Inspection

EIS0047J

**CAUTION:**
**If the hood lock cable is bent or deformed, replace it.**

1. Remove the front grille. Refer to EI-18, "FRONT GRILLE" .
2. Check that the secondary latch is properly engaged with the secondary striker with hood's own weight by dropping it from approx. 200 mm (7.87 in) height.
3. While operating the hood opener, carefully check that the front end of the hood is raised by approx. 20 mm (0.79 in). Also check that the hood opener returns to the original position.

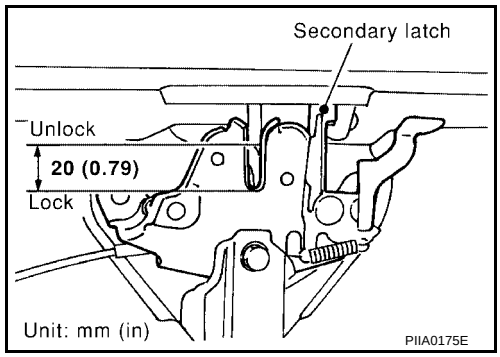

4. Check the hood lock lubrication condition. If necessary, apply "body grease" to the points shown.
5. Install the front grille. Refer to EI-18, "FRONT GRILLE" .

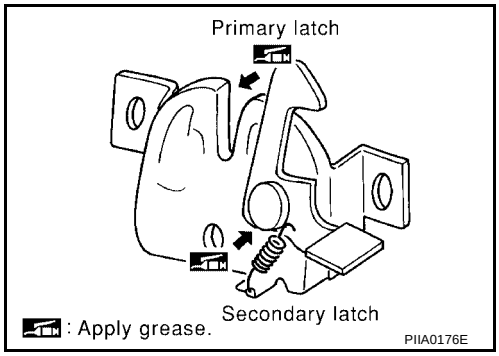

# POWER DOOR LOCK SYSTEM

PFP:24814

## Component Parts and Harness Connector Location

EIS003QD

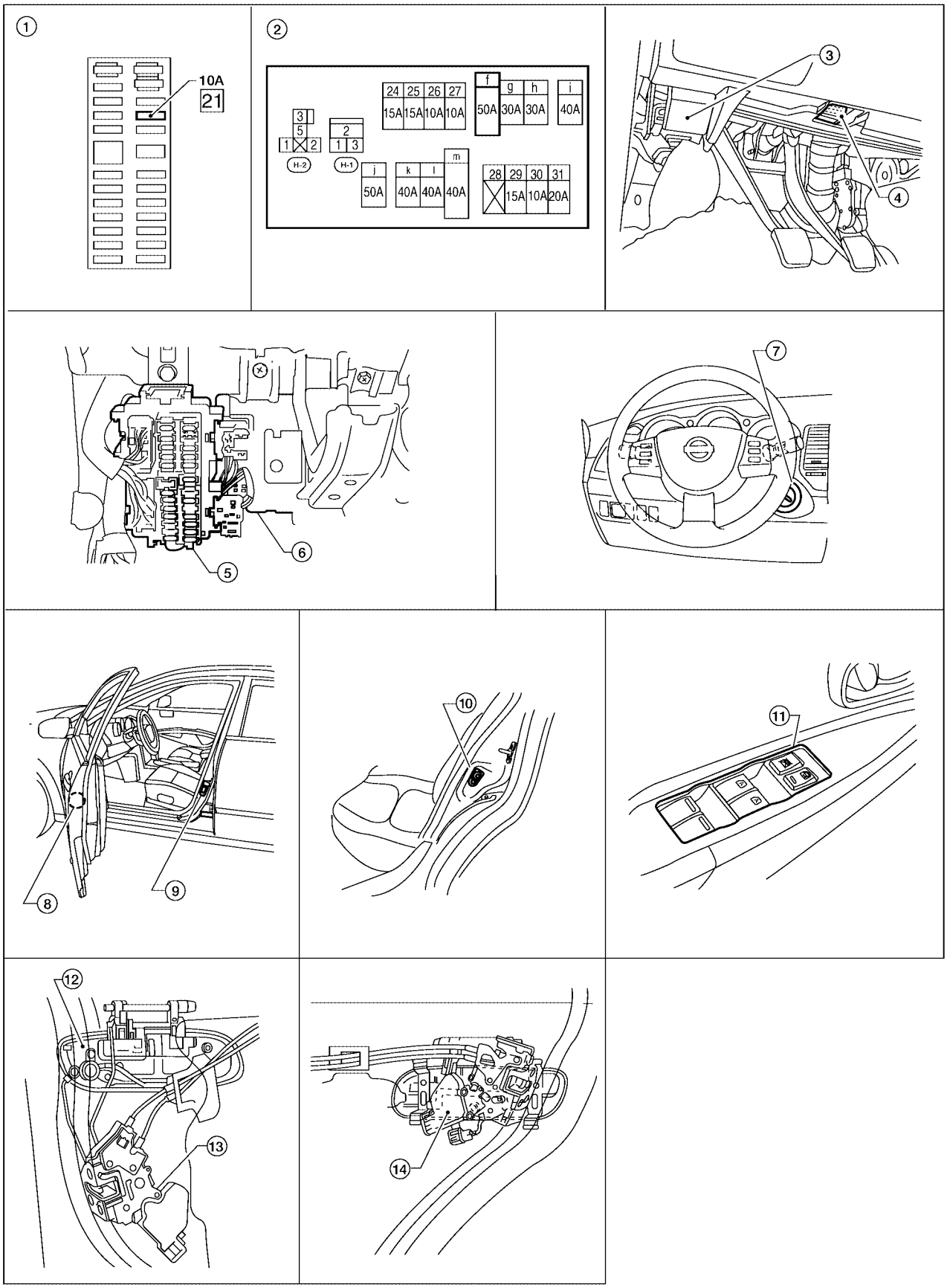


WIIA0794E

1. Fuse block (J/B)
2. Fuse and fusible link box
3. Hood opener handle
4. Data link connector M22
5. Fuse block (J/B)
6. BCM M18, M19, M20
7. Key switch and key lock solenoid M27
8. Front door lock assembly LH (key cylinder switch) D51
9. Front door switch LH B8
   Front door switch RH B108
10. Rear door switch LH B18
    Rear door switch RH B116
11. Main power window and door lock/ unlock switch D7, D8
12. Outside handle
13. Front door lock assembly (actuator) LH D51, RH D151
14. Rear door lock actuator LH D205, RH D305

## System Description

*EIS003QE*

Power is supplied at all times

- to BCM terminal 55
- through 50A fusible link (letter **f,** located in the fuse and fusible link box)
- through 10A fuse [No. 21, located in the fuse block (J/B)]
- to key switch and key lock solenoid terminal 3
- to BCM terminal 42.

With ignition key inserted, power is supplied

- through key switch and key lock solenoid terminal 4
- to BCM terminal 37.

Ground is supplied to terminal 52 of BCM through body grounds M57, M61 and M79.
When the door is locked or unlocked with main power window and door lock/unlock switch, ground is supplied

- to CPU of main power window and door lock/unlock switch
- through main power window and door lock/unlock switch terminal 17
- through grounds M57, M61 and M79.

Then main power window and door lock/unlock switch operation signal is supplied

- to BCM terminal 22
- through main power window and door lock/unlock switch terminal 14.

When the door is locked or unlocked with power window and door lock/unlock switch RH, ground is supplied

- to CPU of power window and door lock/unlock switch RH
- through front power window switch RH terminal 11
- through grounds M57, M61 and M79.

Then power window and door /lock/unlock switch RH operation signal is supplied

- to BCM terminal 22
- through power window and door lock/unlock switch RH terminal 16.

When the door is locked with front door lock assembly LH (key cylinder switch), ground is supplied

- to main power window and door lock/unlock switch terminal 4
- through front door lock assembly LH (key cylinder switch) terminals 1 and 5
- through grounds M57, M61 and M79.

Then front door lock assembly LH (key cylinder switch) operation signal is supplied

- to BCM terminal 22
- through main power window and door lock/unlock switch terminal 14.

When the door is unlocked with front door lock assembly LH (key cylinder switch), ground is supplied

- to main power window and door lock/unlock switch terminal 6
- through front door lock assembly LH (key cylinder switch) terminals 6 and 5
- through grounds M57, M61 and M79.

Then front door lock assembly LH (key cylinder switch) operation signal is supplied

- to BCM terminal 22
- through main power window and door lock/unlock switch terminal 14.

BCM is connected to main power window and door lock/unlock switch and front power window switch RH through a serial link.
When the front door switch LH is ON (door is open), ground is supplied

- to BCM terminal 62
- through front door switch LH terminal 2
- through front door switch LH case ground.

When the front door switch RH is ON (door is open), ground is supplied

- to BCM terminal 12
- through front door switch RH terminal 2
- through front door switch RH case ground.

When the rear door switch LH is ON (door is open), ground is supplied

- to BCM terminal 63
- through rear door switch LH terminal 1
- through rear door switch LH case ground.

When the rear door switch RH is ON (door is open), ground is supplied

- to BCM terminal 13
- through rear door switch RH terminal 1
- through rear door switch RH case ground.

## OUTLINE

### Functions available by operating the door lock and unlock switches on driver's door and passenger's door

- Interlocked with the locking operation of door lock and unlock switch, door lock actuators of all doors are locked.
- Interlocked with the unlocking operation of door lock and unlock switch, door lock actuators of all doors are unlocked.

### Functions available by operating the front door lock assembly LH (key cylinder switch)

- Interlocked with the locking operation of front door lock assembly LH (key cylinder switch), door lock actuators of all doors are locked.
- When front door lock assembly LH (key cylinder switch) is unlocked, front door lock actuator LH is unlocked.
- When front door lock assembly LH (key cylinder switch) is unlocked for the second time within 5 seconds after the first operation, door lock actuators on all doors are unlocked.

### Key reminder door system

When door lock and unlock switch is operated to lock doors with ignition key put in key cylinder and any door open, all door lock actuators are locked and then unlocked.

## Schematic

EIS003QF

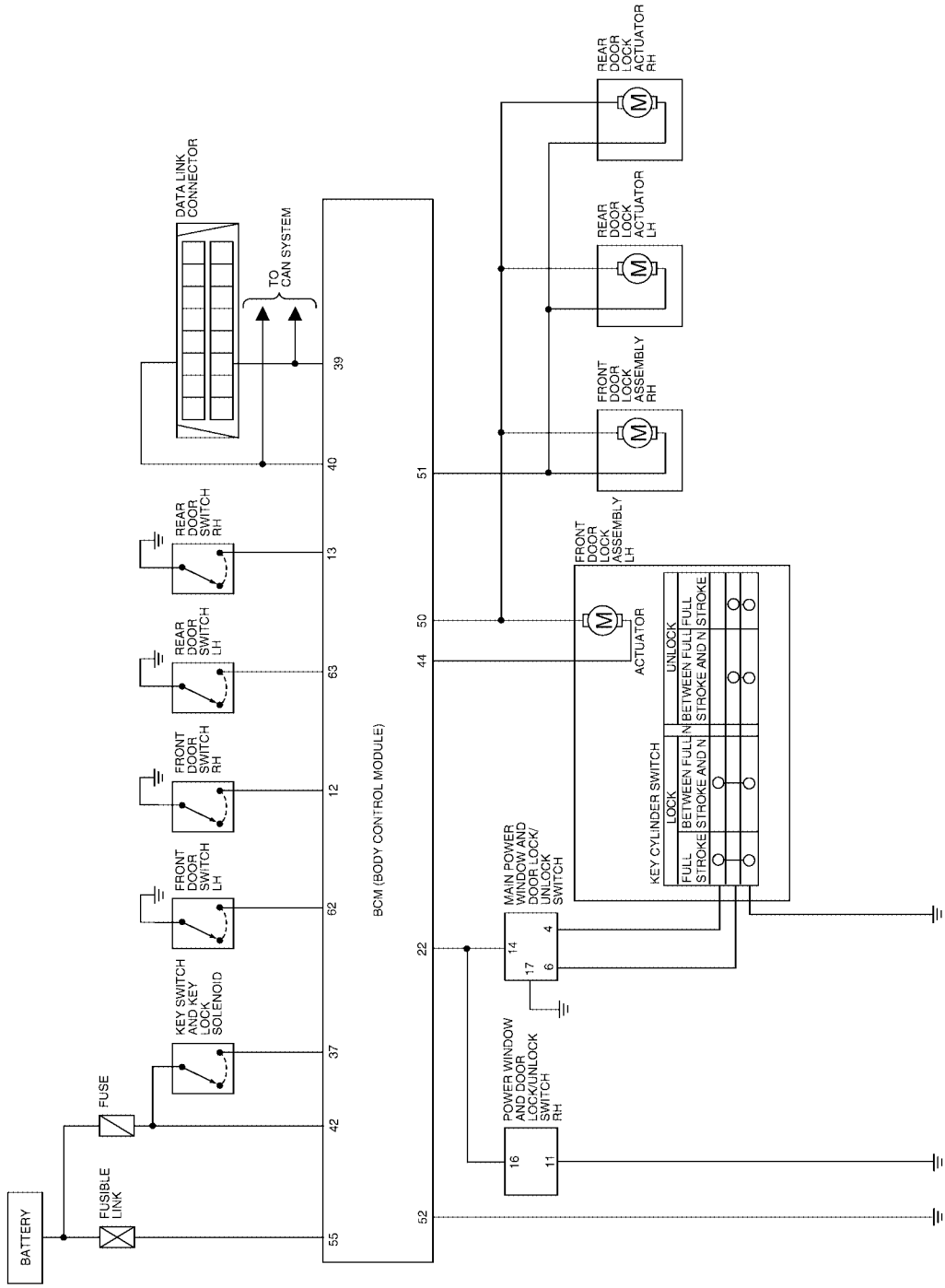


WIWA1257E

## Wiring Diagram — D/LOCK —

EIS003QG

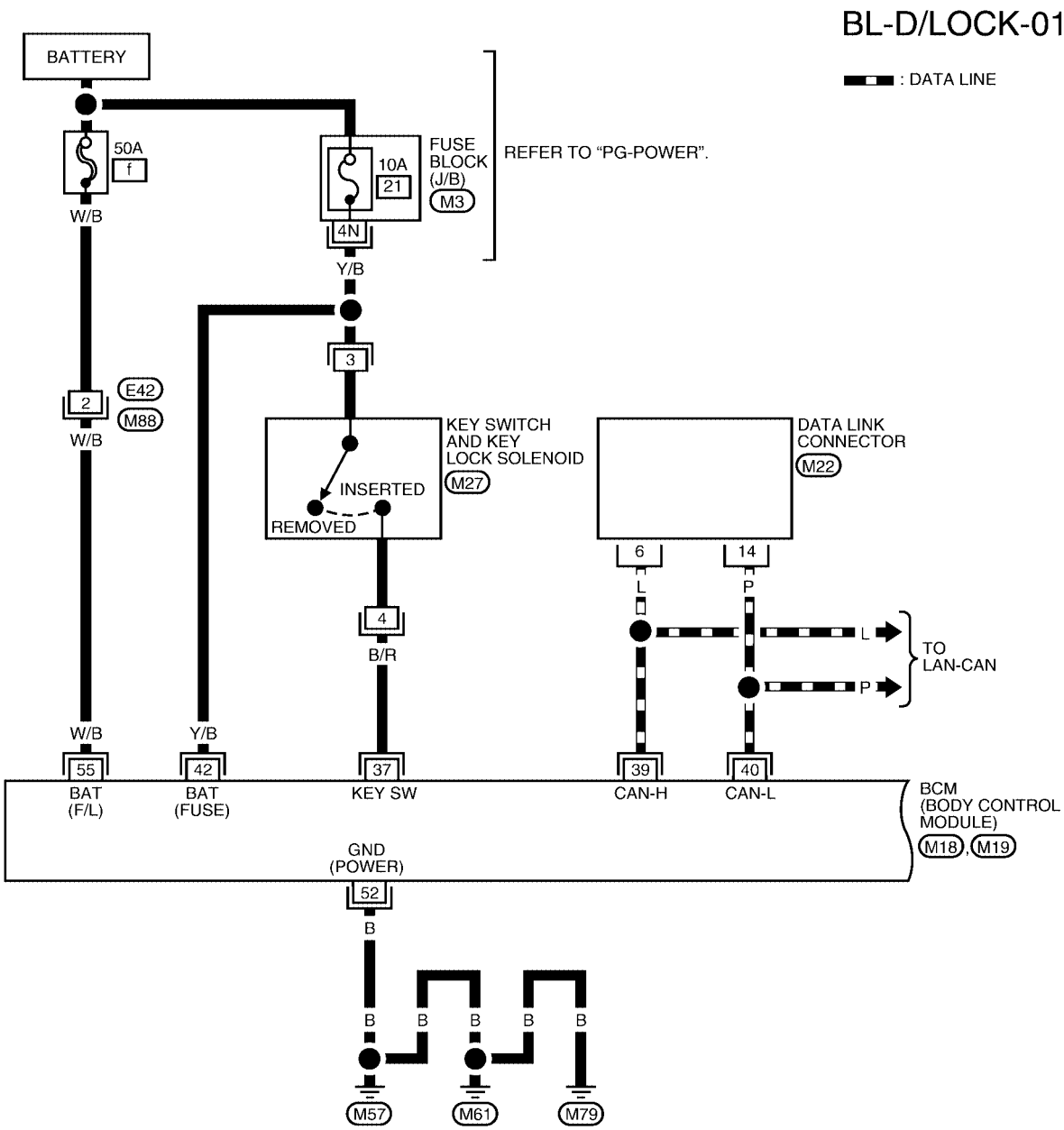


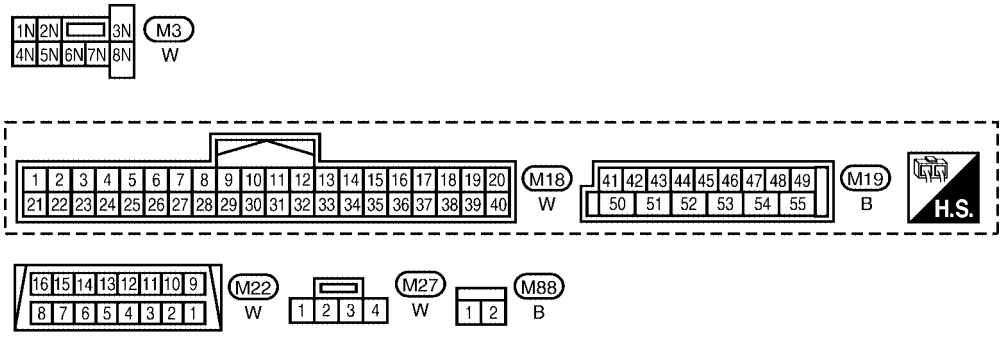


WIWA0325E

BL-D/LOCK-02

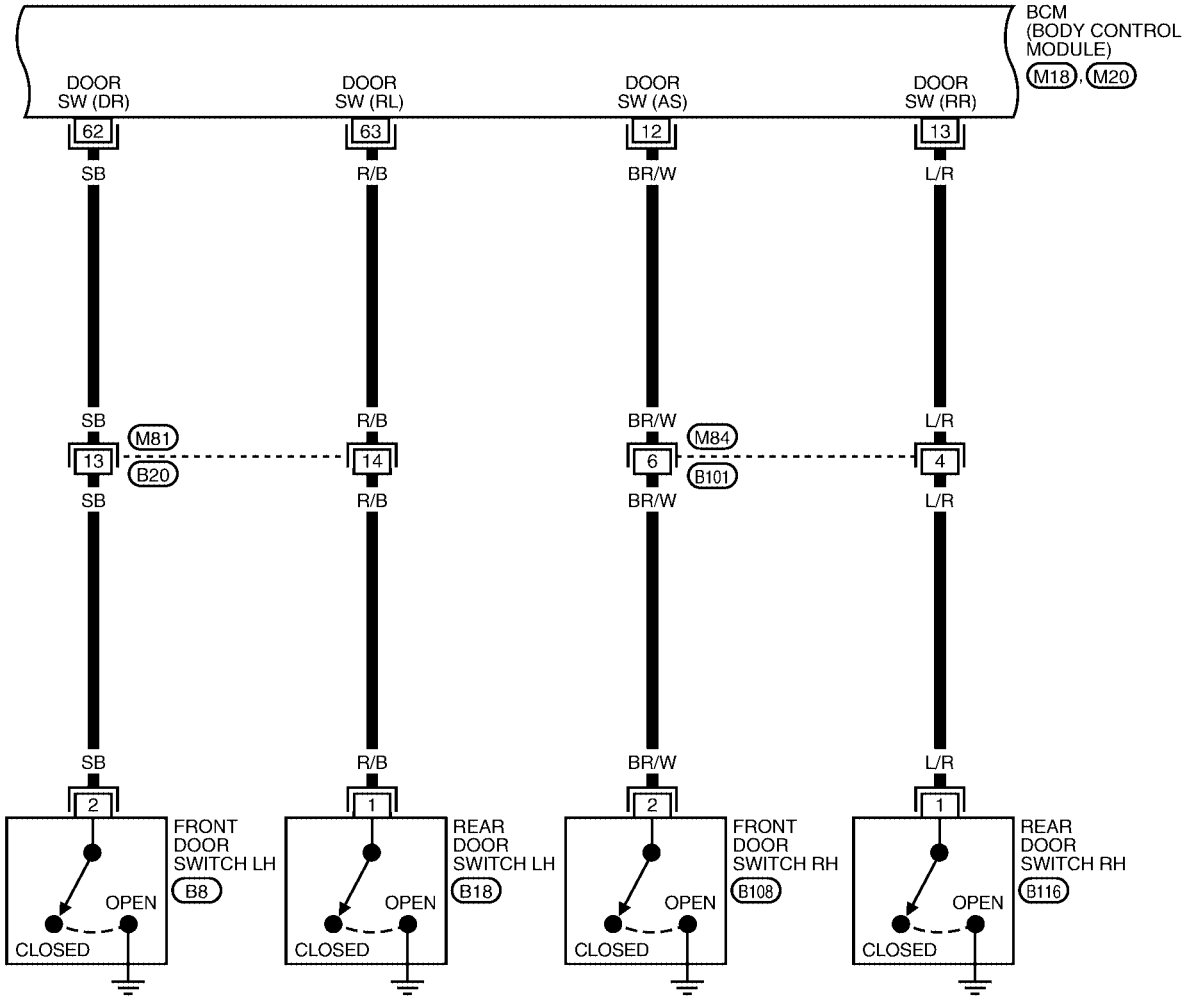


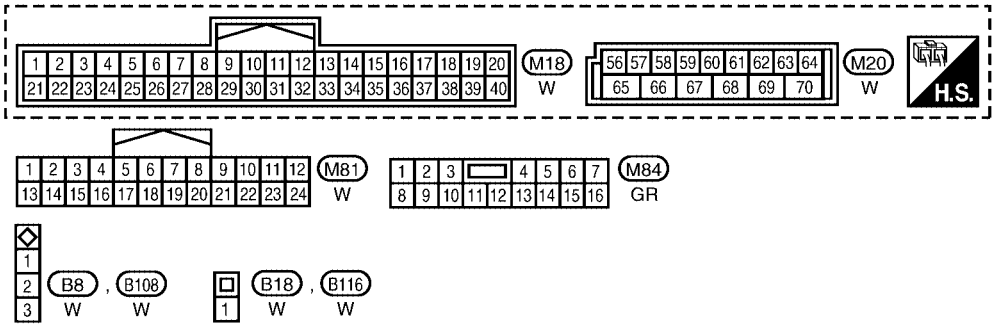


WIWA1258E

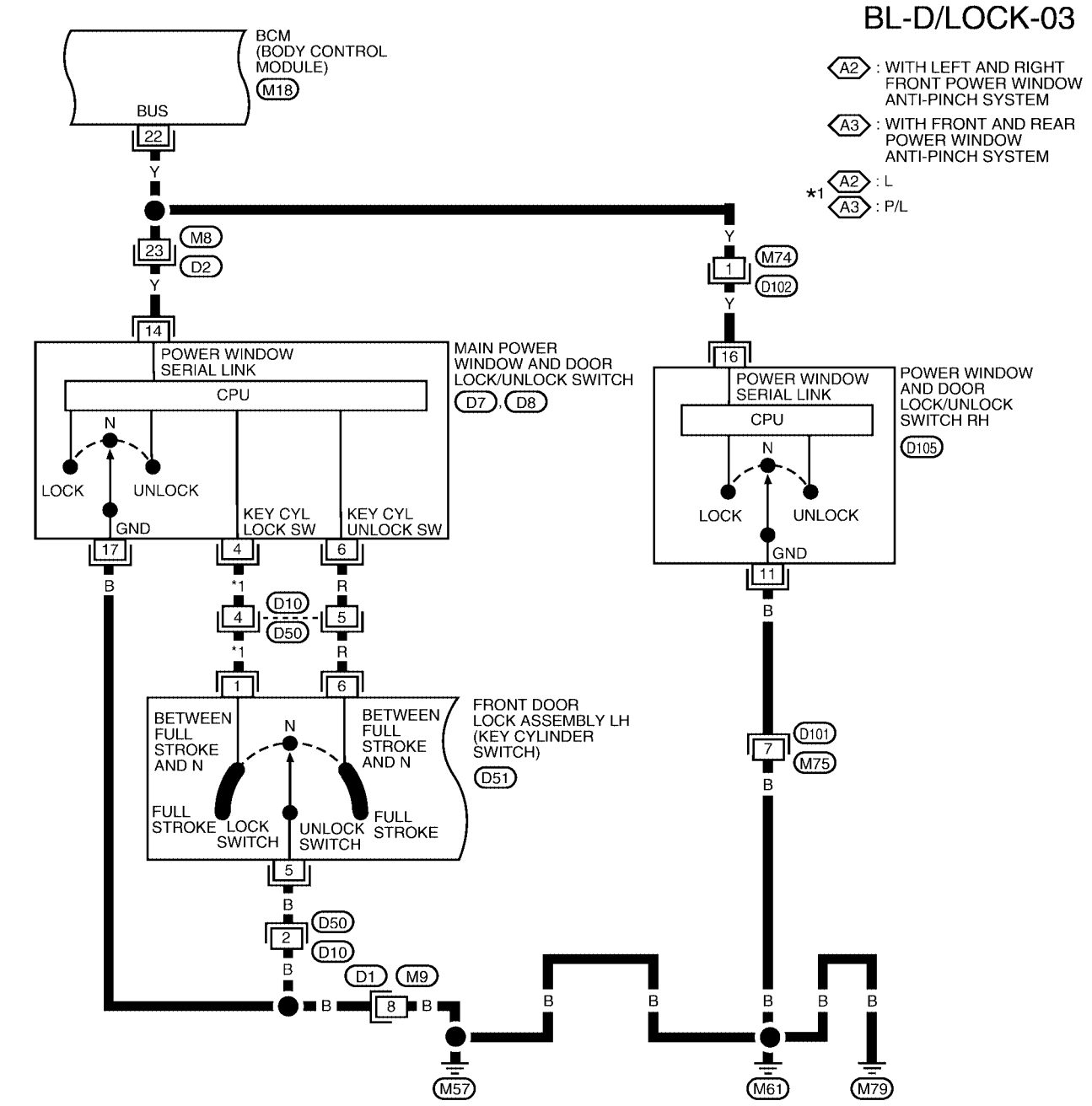
BL-D/LOCK-03
BCM (BODY CONTROL MODULE)
M18
BUS
22
A2 : WITH LEFT AND RIGHT FRONT POWER WINDOW ANTI-PINCH SYSTEM
A3 : WITH FRONT AND REAR POWER WINDOW ANTI-PINCH SYSTEM
*1 A2 : L
A3 : P/L
23
M8
D2
1
M74
D102
14
POWER WINDOW SERIAL LINK
CPU
MAIN POWER WINDOW AND DOOR LOCK/UNLOCK SWITCH
D7, D8
LOCK
UNLOCK
GND
KEY CYL LOCK SW
KEY CYL UNLOCK SW
17
4
6
16
POWER WINDOW SERIAL LINK
CPU
POWER WINDOW AND DOOR LOCK/UNLOCK SWITCH RH
D105
LOCK
UNLOCK
GND
11
D10
D50
FRONT DOOR LOCK ASSEMBLY LH (KEY CYLINDER SWITCH)
D51
BETWEEN FULL STROKE AND N
FULL STROKE LOCK SWITCH
UNLOCK SWITCH
FULL STROKE
D101
M75
D1
M9
M57
M61
M79

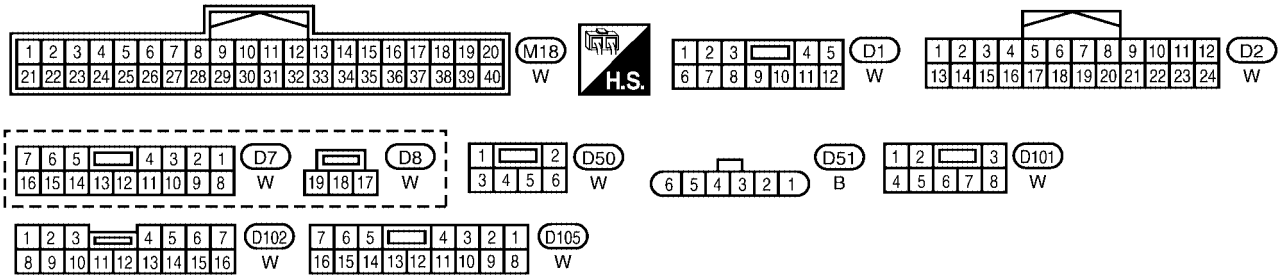
M18
W
H.S.
D1
W
D2
W
D7
W
D8
W
D50
W
D51
B
D101
W
D102
W
D105
W

WIWA1259E

BL-D/LOCK-04

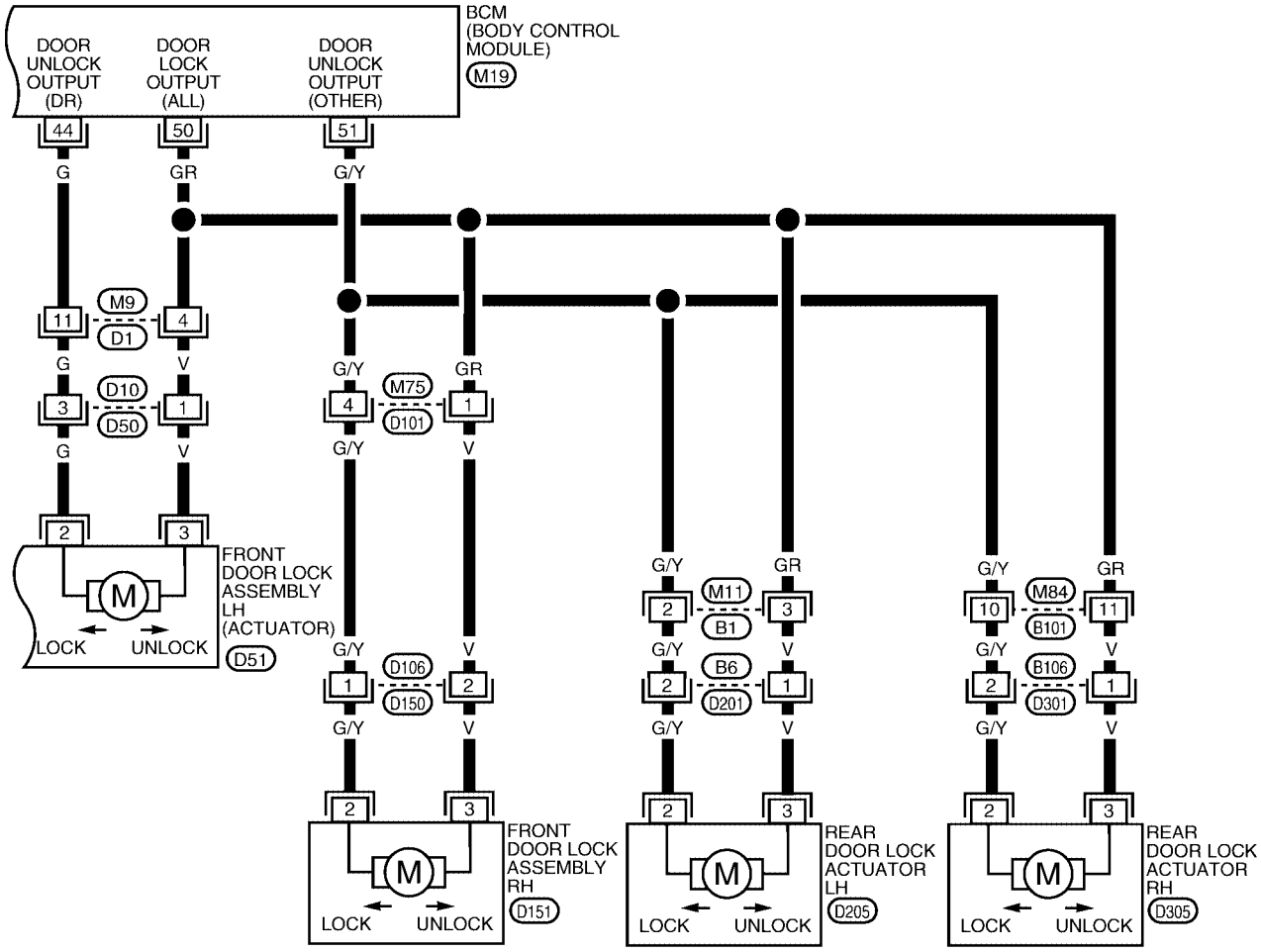


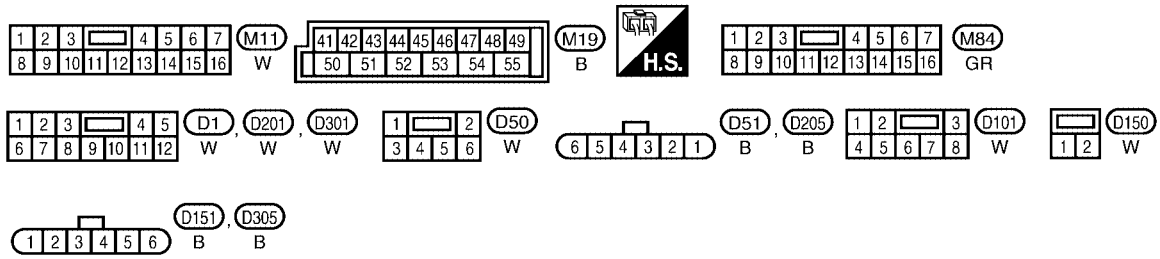


WIWA1260E

## Terminals and Reference Value for BCM

EIS003QH

| Terminal | Wire Color | Item | Condition | Voltage (V) (Approx.) |
|---|---|---|---|---|
| 12 | BR/W | Front door switch RH | Door open (ON) → Door close (OFF) | 0 → Battery voltage |
| 13 | L/R | Rear door switch RH | Door open (ON) → Door close (OFF) | 0 → Battery voltage |
| 22 | Y | Bus | When ignition switch is ON or power window timer operates | 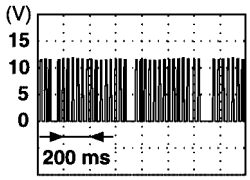  PIIA2344E |
| 37 | B/R | Key switch and key lock solenoid (insert) | Key inserted in IGN key cylinder (ON) → key removed from ignition key cylinder (OFF) | Battery voltage → 0 |
| 39 | L | CAN-H | — | — |
| 40 | P | CAN-L | — | — |
| 42 | Y/B | Battery power supply | — | Battery voltage |
| 44 | G | Front door lock assembly LH (actuator) (unlock) | Driver door lock knob (locked → unlocked) | 0 → Battery voltage |
| 50 | GR | All door lock actuator (lock) | Driver door lock knob (neutral → lock) | 0 → Battery voltage |
| 51 | G/Y | Front door lock assembly RH and rear door lock actuators LH/RH (unlock) | Door lock and unlock switch (locked → unlocked) | 0 → Battery voltage |
| 52 | B | Ground | — | — |
| 55 | W/B | Battery power supply | — | Battery voltage |
| 62 | SB | Front door switch LH | Door open (ON) → Door close (OFF) | 0 → Battery voltage |
| 63 | R/B | Rear door switch LH | Door open (ON) → Door close (OFF) | 0 → Battery voltage |

## Work Flow

EIS003QI

1. Check the symptom and customer's requests.
2. Understand the outline of system. Refer to BL-18, "System Description" .
3. According to the trouble diagnosis chart, repair or replace the cause of the malfunction. Refer to BL-28, "Trouble Diagnoses Symptom Chart" .
4. Does power door lock system operate normally? OK: GO TO 5, NG: GO TO 3.
5. Inspection End.

## CONSULT–II Function (BCM)

EIS003QJ

CONSULT-II can display each diagnostic item using the diagnostic test modes shown following.

| BCM diagnostic test item | Diagnostic mode | Description |
|---|---|---|
| Inspection by part | WORK SUPPORT | Supports inspections and adjustments. Commands are transmitted to the BCM for setting the status suitable for required operation, input/output signals are received from the BCM and received date is displayed. |
| | DATA MONITOR | Displays BCM input/output data in real time. |
| | ACTIVE TEST | Operation of electrical loads can be checked by sending drive signal to them. |
| | SELF-DIAG RESULTS | Displays BCM self-diagnosis results. |
| | CAN DIAG SUPPORT MNTR | The result of transmit/receive diagnosis of CAN communication can be read. |
| | ECU PART NUMBER | BCM part number can be read. |
| | CONFIGURATION | Performs BCM configuration read/write functions. |

### CONSULT–II BASIC OPERATION PROCEDURE

**CAUTION:**

**If CONSULT-II is used with no connection of CONSULT-II CONVERTER, malfunctions might be detected in self-diagnosis depending on control unit which carries out CAN communication.**

1. With ignition switch OFF, connect CONSULT–II and CONSULT-II CONVERTER to data link connector on vehicle, and turn ON ignition switch.

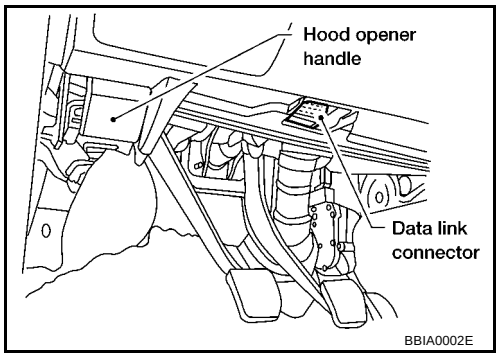


2. Touch “START (NISSAN BASED VHCL)”.

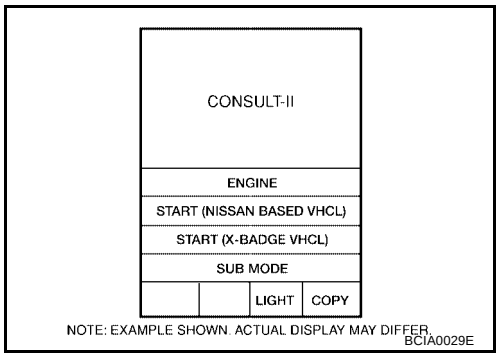


3. Touch “BCM” on “SELECT SYSTEM” screen.
   If BCM is not indicated, refer to GI-39, "CONSULT-II Data Link Connector (DLC) Circuit" .

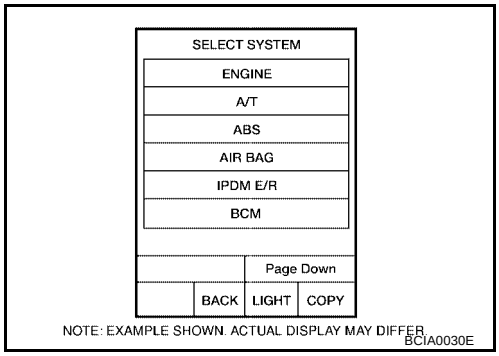

4. Touch “DOOR LOCK”.

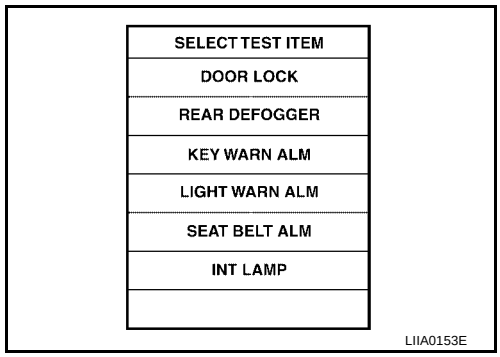


5. Select diagnosis mode.
"WORK SUPPORT", “DATA MONITOR” and "ACTIVE TEST" are available.

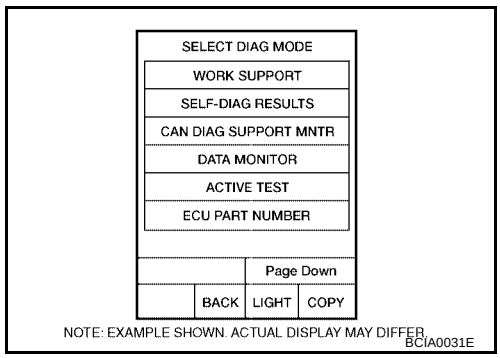


## DATA MONITOR

| Monitor item "OPERATION" | | Content |
|---|---|---|
| IGN ON SW | "ON/OFF" | Indicates [ON/OFF] condition of ignition switch. |
| KEY ON SW | "ON/OFF" | Indicates [ON/OFF] condition of key switch. |
| CDL LOCK SW | "ON/OFF" | Indicates [ON/OFF] condition of lock signal from lock/unlock switch LH and RH. |
| CDL UNLOCK SW | "ON/OFF" | Indicates [ON/OFF] condition of unlock signal from lock/unlock switch LH and RH. |
| DOOR SW–DR | "ON/OFF" | Indicates [ON/OFF] condition of front door switch LH. |
| DOOR SW–AS | "ON/OFF" | Indicates [ON/OFF] condition of front door switch RH. |
| DOOR SW–RR | "ON/OFF" | Indicates [ON/OFF] condition of rear door switch RH. |
| DOOR SW–RL | "ON/OFF" | Indicates [ON/OFF] condition of rear door switch LH. |
| KEY CYL LK-SW | "ON/OFF" | Indicates [ON/OFF] condition of lock signal from key cylinder. |
| KEY CYL UN-SW | "ON/OFF" | Indicates [ON/OFF] condition of unlock signal from key cylinder. |
| KEYLESS LOCK | "ON/OFF" | Indicates [ON/OFF] condition of lock signal from keyfob. |
| KEYLESS UNLOCK | "ON/OFF" | Indicates [ON/OFF] condition of unlock signal from keyfob. |

## ACTIVE TEST

| Test item | Content |
|---|---|
| ALL LOCK | This test is able to check all door lock actuators lock operation. These actuators lock when "ON" on CONSULT–II screen is touched. |
| ALL UNLOCK | This test is able to check all door lock actuators unlock operation. These actuators unlock when "ON" on CONSULT–II screen is touched. |
| DR UNLOCK | This test is able to check front door lock actuator LH unlock operation.These actuators lock when "ON" on CONSULT–II screen is touched. |
| OTHER UNLOCK | This test is able to check door lock actuators (except front door lock actuator LH) unlock operation.These actuators unlock when "ON" on CONSULT–II screen is touched. |

## Trouble Diagnoses Symptom Chart

EIS003QK

| Symptom | Repair order | Refer to page |
|---|---|---|
| Key reminder door function does not operate properly. | 1. Door switch check | BL-30 |
| | 2. Key switch (insert) check | BL-32 |
| | 3. Replace BCM. | BCS-20 |
| Power door lock does not operate with door lock and unlock switch on main power window and door lock/unlock switch or power window and door lock/unlock switch RH | 1. Door lock/unlock switch check | BL-33 |
| Front door lock assembly LH (actuator) does not operate. | 1. Front door lock assembly LH (actuator) check | BL-35 |
| Specific door lock actuator does not operate. | 1. Door lock actuator check (Front RH, Rear LH/RH) | BL-36 |
| Power door lock does not operate with front door lock assembly LH (key cylinder switch) operation. | 1. Front door lock assembly LH (key cylinder switch) check | BL-37 |
| | 2. Replace BCM. | BCS-20 |
| Power door lock does not operate. | 1. BCM power supply and ground circuit check | BL-28 |
| | 2. Door lock/unlock switch check | BL-33 |

## BCM Power Supply and Ground Circuit Check

EIS003QL

### 1. CHECK FUSE AND FUSIBLE LINK

Check the following BCM fuse and fusible link.

| Component Parts | Terminal No. (SIGNAL) | Ampere | No. | Location |
|---|---|---|---|---|
| BCM | 21 (BAT power supply) | 10A | 21 | Fuse block (J/B) |
| BCM | 55 (BAT power supply) | 50A | **f** | Fuse and fusible link box |

**NOTE:**
Refer to BL-17, "Component Parts and Harness Connector Location" .

OK or NG

OK >> GO TO 2.
NG >> If fuse is blown, be sure to eliminate cause of problem before installing new fuse, refer to PG-4, "POWER SUPPLY ROUTING CIRCUIT" .

### 2. CHECK POWER SUPPLY CIRCUIT

1. Turn ignition switch OFF.
2. Disconnect BCM.
3. Check voltage between BCM connector M19 terminals 42, 55 and ground.

| Connector | Terminals | | Voltage (V) (Approx.) |
|---|---|---|---|
| | (+) | (-) | |
| M19 | 42 | Ground | Battery voltage |
| | 55 | | |

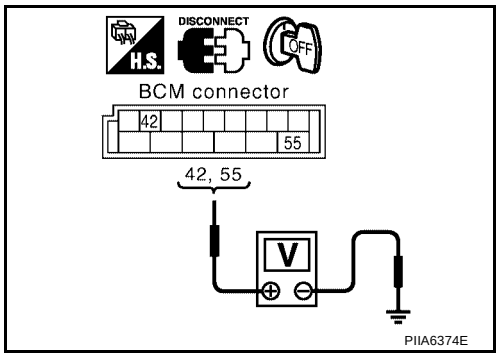


OK or NG

OK >> GO TO 3.
NG >> Repair or replace harness.

## 3. CHECK GROUND CIRCUIT

Check continuity between BCM connector M19 terminal 52 and ground.

| Connector | Terminals | | Continuity |
|---|---|---|---|
| M19 | 52 | Ground | Yes |

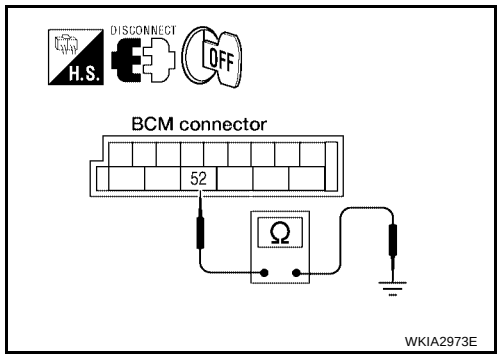


OK or NG

OK >> Power supply and ground circuit is OK.
NG >> Repair or replace harness.

## Door Switch Check

EIS003QM

### 1. CHECK DOOR SWITCHES INPUT SIGNAL

With CONSULT-II

Check door switches ("DOOR SW-DR", "DOOR SW-AS", "DOOR SW-RL", "DOOR SW-RR") in DATA MONITOR mode with CONSULT–II.Refer to BL-27, "DATA MONITOR" .

- When doors are open:

  **DOOR SW-DR : ON**
  **DOOR SW-AS : ON**
  **DOOR SW-RL : ON**
  **DOOR SW-RR : ON**

- When doors are closed:

  **DOOR SW-DR : OFF**
  **DOOR SW-AS : OFF**
  **DOOR SW-RL : OFF**
  **DOOR SW-RR : OFF**

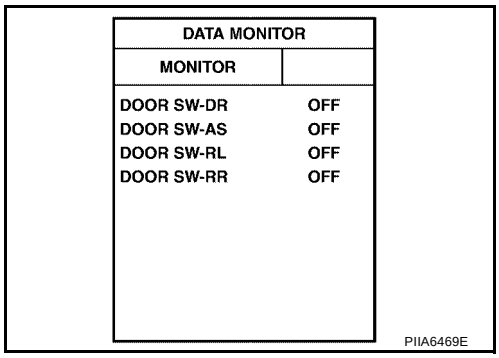


Without CONSULT-II

Check voltage between BCM connector M18 or M20 terminals 12, 13, 62, 63 and ground.

| Connector | Item | Terminals ( + ) | Terminals ( – ) | Condition | Voltage (V) (Approx.) |
|---|---|---|---|---|---|
| M20 | Front door switch LH | 62 | Ground | Open ↓ Closed | 0 ↓ Battery voltage |
| | Rear door switch LH | 63 | | | |
| M18 | Front door switch RH | 12 | | | |
| | Rear door switch RH | 13 | | | |

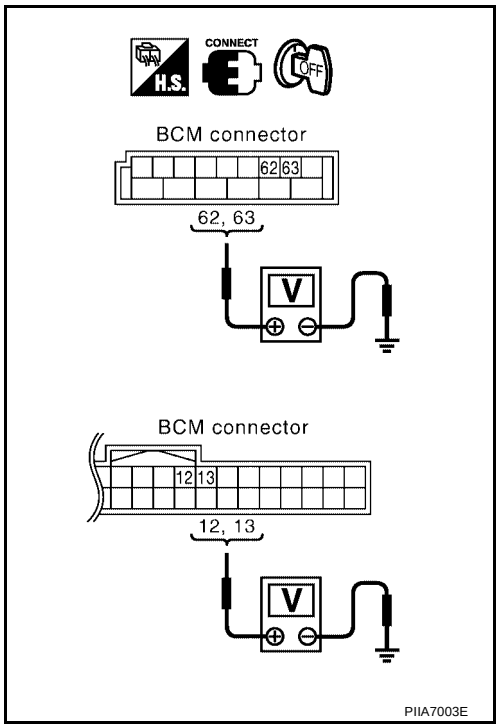


OK or NG

OK >> Door switch circuit is OK.
NG >> GO TO 2.

## 2. CHECK DOOR SWITCH CIRCUIT

1. Turn ignition switch OFF.
2. Disconnect door switch and BCM.
3. Check continuity between door switch connector B8 (Front LH) or B108 (Front RH) terminal 2, B18 (Rear LH) or B116 (Rear RH) terminal 1 and BCM connector M18, M20 terminals 12, 13, 62 and 63.

**2 - 62 : Continuity should exist.**
**2 - 12 : Continuity should exist.**
**1 - 63 : Continuity should exist.**
**1 - 13 : Continuity should exist.**

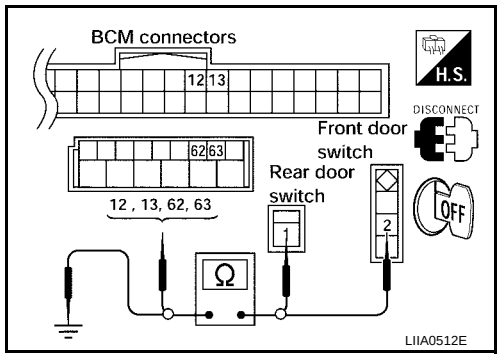


4. Check continuity between door switch connector B8 (Front LH) or B108 (Front RH) terminal 2, B18 (Rear LH) or B116 (Rear RH) terminal 1 and ground.

**2 - Ground : Continuity should not exist.**
**1 - Ground : Continuity should not exist.**

OK or NG

OK >> GO TO 3.
NG >> Repair or replace harness.

## 3. CHECK DOOR SWITCHES

Check continuity between door switch connector terminal and switch case ground.

| Component | Terminals | Condition of switch | Continuity |
|---|---|---|---|
| Front door switch LH/RH | 2 – Case ground | Pushed | No |
| | | Released | Yes |
| Rear door switch LH/RH | 1 – Case ground | Pushed | No |
| | | Released | Yes |

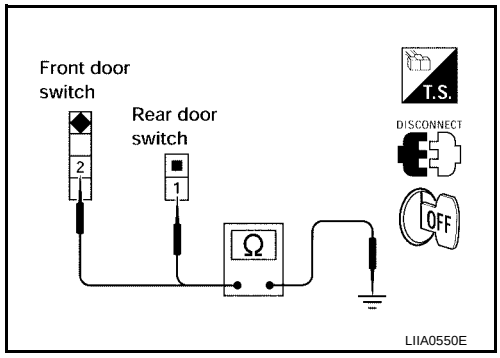


OK or NG

OK >> Check door switch case ground condition.
NG >> Replace door switch.

## Key Switch and Key Lock Solenoid (Insert) Check

EIS003QN

### 1. CHECK KEY SWITCH AND KEY LOCK SOLENOID INPUT SIGNAL

With CONSULT-II

Check key switch "KEY ON SW" in DATA MONITOR mode with CONSULT–II. Refer to BL-27, "DATA MONITOR" .

- When key is inserted to ignition key cylinder:

  **KEY ON SW : ON**

- When key is removed from ignition key cylinder:

  **KEY ON SW : OFF**

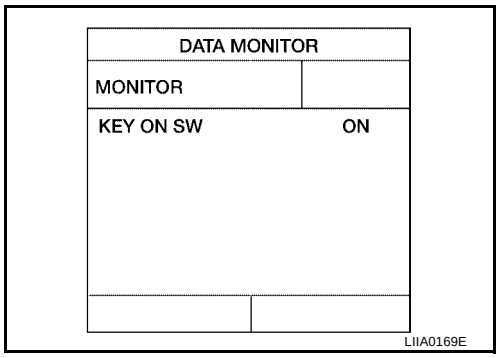


Without CONSULT-II

Check voltage between BCM connector M18 terminal 37 and ground.

| Connector | Terminals | | Condition | Voltage (V) (Approx.) |
|---|---|---|---|---|
| | ( + ) | ( – ) | | |
| M18 | 37 | Ground | Key is inserted. | Battery voltage |
| | | | Key is removed. | 0 |

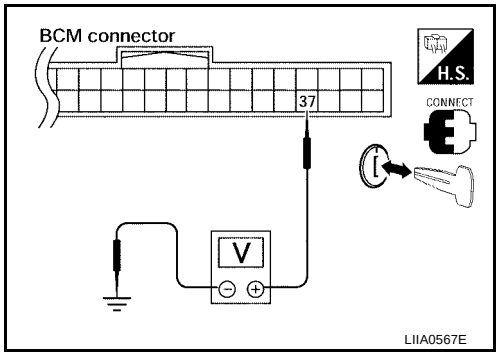


OK or NG

OK >> Key switch circuit is OK.

NG >> GO TO 2.

### 2. CHECK KEY SWITCH AND KEY LOCK SOLENOID (INSERT)

1. Disconnect key switch and key lock solenoid.
2. Check continuity between key switch connector terminals.

| Terminals | Condition | Continuity |
|---|---|---|
| 3 – 4 | Key is inserted. | Yes |
| | Key is removed. | No |

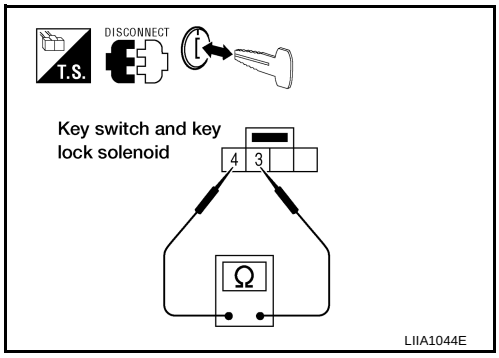


OK or NG

OK >> Repair or replace harness.

NG >> Replace key switch and key lock solenoid.

## Door Lock/Unlock Switch Check

EIS003QO

### 1. CHECK DOOR LOCK/UNLOCK SWITCH INPUT SIGNAL

With CONSULT-II

Check door lock/unlock switch ("CDL LOCK SW", "CDL UNLOCK SW") in DATA MONITOR mode in CONSULT–II. Refer to BL-27, "DATA MONITOR"

- When door lock/unlock switch is turned to LOCK:

  **CDL LOCK SW : ON**

- When door lock/unlock switch is turned to UNLOCK:

  **CDL UNLOCK SW : ON**

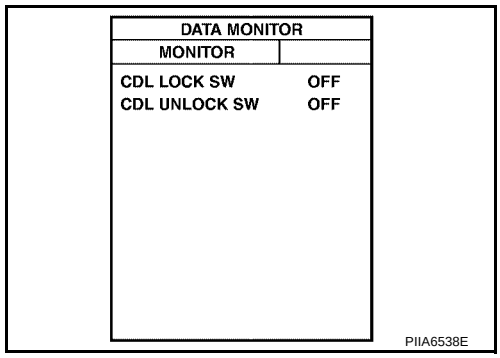


Without CONSULT-II

1. Remove key from ignition key cylinder.
2. Check the signal between BCM connector M18 terminal 22 and ground with oscilloscope when door lock/unlock switch is turned to LOCK or UNLOCK.
3. Make sure the signals which are shown in the figure below can be detected during 10 seconds just after the door lock/unlock switch is turned to LOCK or UNLOCK.

| Connector | Terminals | | Voltage (V) (Approx.) |
|---|---|---|---|
| | ( + ) | ( – ) | |
| M18 | 22 | Ground | 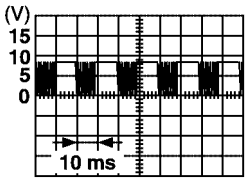  PIIA1297E |

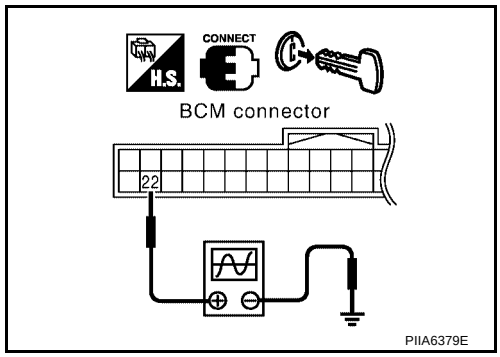


OK or NG

OK >> Door lock and unlock switch circuit is OK.
NG >> GO TO 2.

### 2. CHECK BCM OUTPUT SIGNAL

Check ("POWER WINDOW DOWN") in ACTIVE TEST mode for "MULTI REMOTE ENT" with CONSULT–II. Refer to BL-27, "ACTIVE TEST" .

**When "ACTIVE TEST" is performed, are the front windows lowered?**

OK or NG

OK >> GO TO 3.
NG >> Replace BCM. Refer to BCS-20, "BCM" .

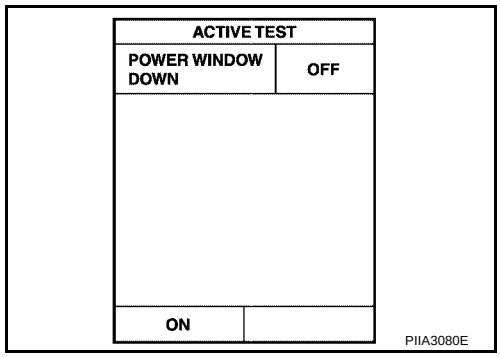

## 3. CHECK DOOR LOCK/UNLOCK SWITCH GROUND HARNESS

1. Turn ignition switch OFF.
2. Disconnect main power window and door lock/unlock switch or power window and door lock/unlock switch RH.
3. Check continuity between main power window and door lock/unlock switch connector D8 terminal 17 and ground.

**17 - Ground : Continuity should exist.**

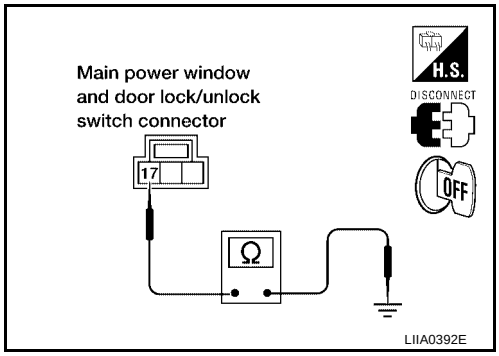


4. Check continuity between power window and door lock/unlock switch RH connector D105 terminal 11 and ground

**11 - Ground : Continuity should exist.**

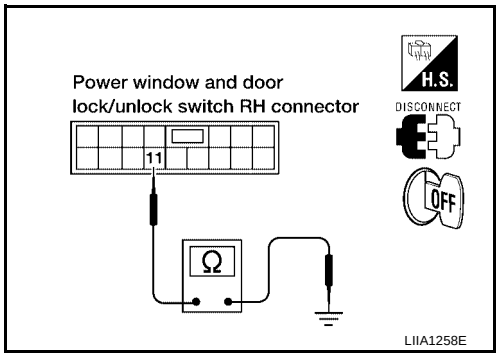


OK or NG

OK >> GO TO 4.
NG >> Repair or replace harness.

## 4. CHECK POWER WINDOW SERIAL LINK CIRCUIT

1. Disconnect BCM.
2. Check continuity between BCM connector M18 terminal 22 and main power window and door lock/unlock switch connector D7 terminal 14.

**22 - 14 : Continuity should exist.**

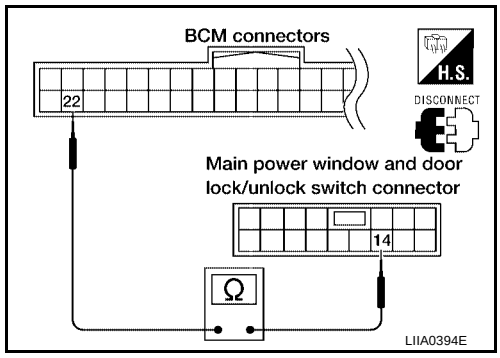


3. Check continuity between BCM connector M18 terminal 22 and power window and door lock/unlock switch RH connector D105 terminal 16.

**22 - 16 : Continuity should exist.**

4. Check continuity between BCM connector M18 terminal 22 and ground.

**22 - Ground : Continuity should not exist.**

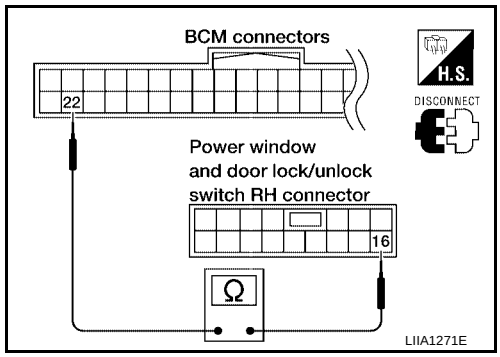


OK or NG

OK >> Replace main power window and door lock/unlock switch or power window and door lock/unlock switch RH.

NG >> Repair or replace harness.

# Front Door Lock Assembly LH (Actuator) Check

EIS003QP

## 1. CHECK FRONT DOOR LOCK ASSEMBLY LH (ACTUATOR) HARNESS

1. Turn ignition switch OFF.
2. Disconnect BCM and front door lock assembly LH (actuator).
3. Check continuity between BCM connector M19 terminals 44, 50 and front door lock assembly LH (actuator) connector D51 terminals 2, 3.

| Connector | Terminal | Connector | Terminal | Continuity |
|---|---|---|---|---|
| M19 | 44 | D51 | 2 | Yes |
| | 50 | | 3 | Yes |

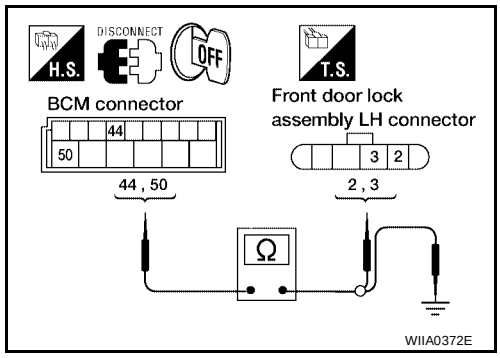


4. Check continuity between BCM connector M19 terminals 44, 50 and body ground.

| Connector | Terminals | | Continuity |
|---|---|---|---|
| M19 | 44 | Ground | No |
| | 50 | | No |

OK or NG

OK >> GO TO 2.

NG >> Repair or replace harness.

## 2. CHECK FRONT DOOR LOCK ASSEMBLY LH SIGNAL

1. Reconnect BCM.
2. Check voltage between BCM connector M19 terminals 44, 50 and ground.

| Connector | Terminals (+) | Terminals (-) | Condition | Voltage (V) (Approx.) |
|---|---|---|---|---|
| M19 | 44 | Ground | Main power window and door lock/unlock switch is turned to UNLOCK | 0 → Battery voltage |
| | 50 | | Main power window and door lock/unlock switch is turned to LOCK | 0 → Battery voltage |

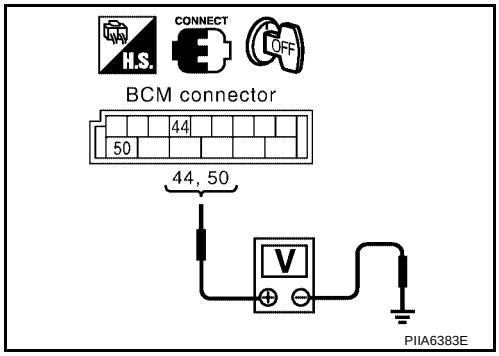


OK or NG

OK >> Replace front door lock assembly LH (actuator). Refer to BL-70, "Removal and Installation" .
NG >> Replace BCM. Refer to BCS-20, "BCM" .

## Door Lock Actuator Check (Front RH and Rear LH/RH)

EIS003QQ

## 1. CHECK DOOR LOCK ACTUATOR HARNESS

1. Turn ignition switch OFF.
2. Disconnect BCM and each door lock actuator.
3. Check continuity between BCM connector M19 terminals 50, 51 and front door lock assembly RH, rear door lock actuator LH/RH connector D151, D205, D305 terminals 2, 3.

| Connector | Terminal | Connector | Terminal | Continuity |
|---|---|---|---|---|
| M19 | 50 | D151, D205, D305 | 3 | Yes |
| | 51 | | 2 | Yes |

4. Check continuity between BCM connector M19 terminals 50, 51 and body ground.

| Connector | Terminals | | Continuity |
|---|---|---|---|
| M19 | 50 | Ground | No |
| | 51 | | No |

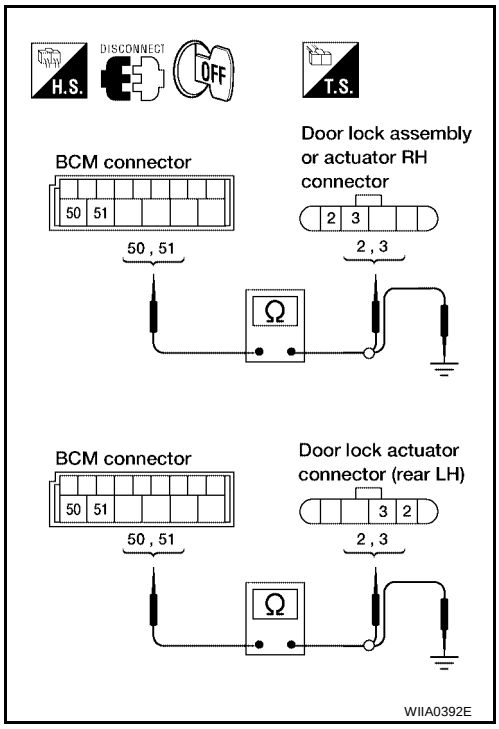


OK or NG

OK >> GO TO 2.
NG >> Repair or replace harness.

## 2. CHECK DOOR LOCK ACTUATOR SIGNAL

1. Reconnect BCM.
2. Check voltage between BCM connector M19 terminals 50, 51 and ground.

| Connector | Terminals (+) | Terminals (-) | Condition | Voltage (V) (Approx.) |
|---|---|---|---|---|
| M19 | 50 | Ground | Main power window and door lock/unlock switch is turned to UNLOCK | 0 → Battery voltage |
| | 51 | | Main power window and door lock/unlock switch is turned to LOCK | 0 → Battery voltage |

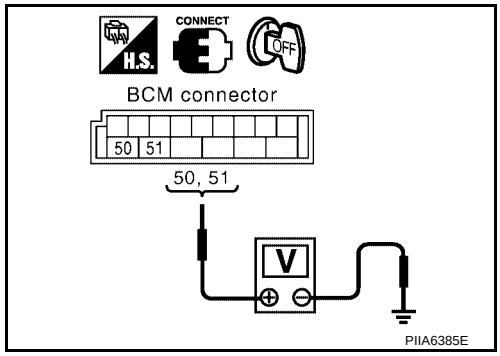


OK or NG

OK >> Replace front door lock assembly RH or rear door lock actuator LH/RH. Refer to BL-70, "FRONT DOOR LOCK" or BL-73, "REAR DOOR LOCK" .

NG >> Replace BCM. Refer to BCS-20, "BCM" .

# Front Door Lock Assembly LH (Key Cylinder Switch) Check

EIS003QR

## 1. CHECK FRONT DOOR LOCK ASSEMBLY (KEY CYLINDER SWITCH)

With CONSULT-II

Check front door lock assembly LH (key cylinder switch) ("KEY CYL LK-SW") and ("KEY CYL UN-SW) in DATA MONITOR mode in CONSULT–II. Refer to BL-27, "DATA MONITOR" .

- When key inserted in front key cylinder is turned to LOCK:

  **KEY CYL LK-SW : ON**

- When key inserted in front key cylinder is turned to UNLOCK:

  **KEY CYL UN-SW : ON**

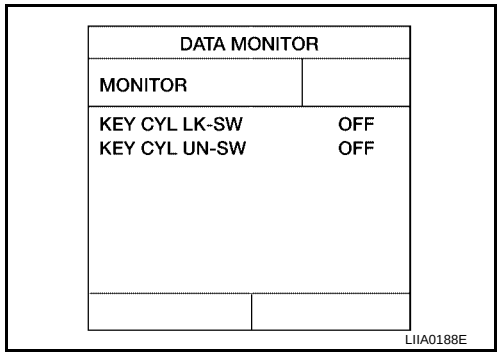


Without CONSULT-II

Check voltage between main power window and door lock/unlock switch connector D7 terminals 4, 6 and ground.

| Connector | Terminals ( + ) | Terminals ( – ) | Condition | Voltage (V) (Approx.) |
|---|---|---|---|---|
| D7 | 4 | Ground | Neutral/Unlock | 5 |
| | | | Lock | 0 |
| | 6 | | Neutral/Lock | 5 |
| | | | Unlock | 0 |

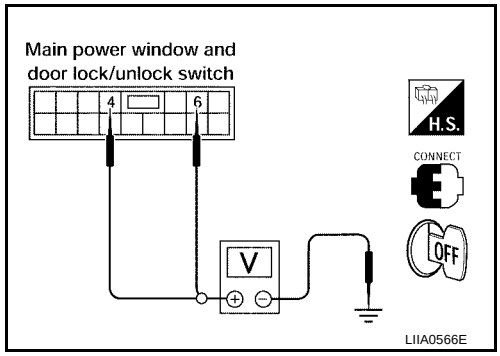


OK or NG

OK >> Front door lock assembly (key cylinder switch) signal is OK.

NG >> GO TO 2.

## 2. CHECK DOOR KEY CYLINDER SWITCH LH GROUND HARNESS

1. Turn ignition switch OFF.
2. Disconnect front door lock assembly LH (key cylinder switch).
3. Check continuity between front door lock assembly LH (key cylinder switch) connector D51 terminal 5 and body ground.

| Connector | Terminals | Continuity |
|---|---|---|
| D51 | 5 – Ground | Yes |

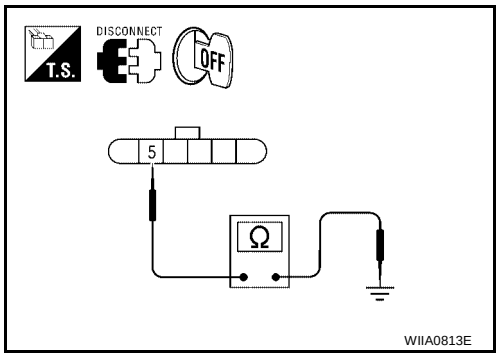


OK or NG

OK >> GO TO 3.
NG >> Repair or replace harness.

## 3. CHECK DOOR KEY CYLINDER SWITCH LH

Check continuity between front door lock assembly LH (key cylinder switch) terminals.

| Terminals | Condition | Continuity |
|---|---|---|
| 1 – 5 | Key is turned to UNLOCK or neutral. | No |
| | Key is turned to LOCK. | Yes |
| 5 – 6 | Key is turned to LOCK or neutral. | No |
| | Key is turned to UNLOCK. | Yes |

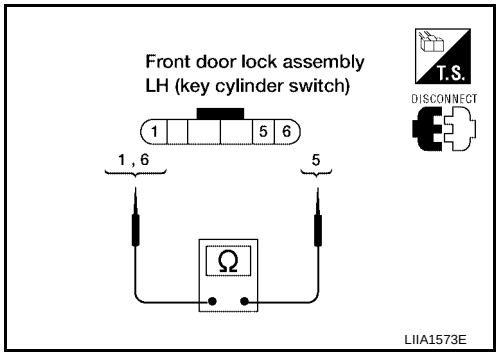


OK or NG

OK >> GO TO 4.
NG >> Replace front door lock assembly LH (key cylinder switch). Refer to BL-70, "FRONT DOOR LOCK" .

## 4. CHECK DOOR KEY CYLINDER HARNESS

Check continuity between main power window and door lock/unlock switch connector (A) D7 terminals 4, 6 and front door lock assembly LH (key cylinder switch) connector (B) D51 terminals 1, 6 and body ground.

| Connector | Terminal | Connector | Terminal | Continuity |
|---|---|---|---|---|
| A: Main power window and door lock/unlock switch | 4 | B: Front door lock assembly LH (key cylinder switch) | 1 | Yes |
| | 6 | | 6 | Yes |
| | 4 | Ground | | No |
| | 6 | Ground | | No |

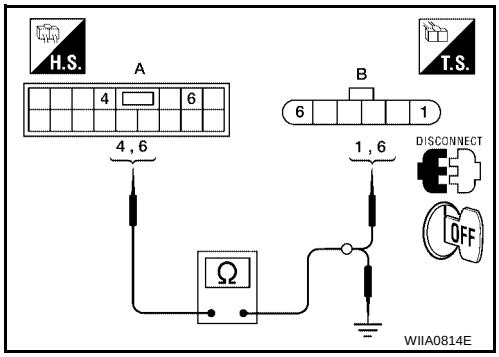


OK or NG

OK >> Replace main power window and door lock/unlock switch.
NG >> Repair or replace harness.

# REMOTE KEYLESS ENTRY SYSTEM

PFP:28596

## Component Parts and Harness Connector Location

EIS003QS

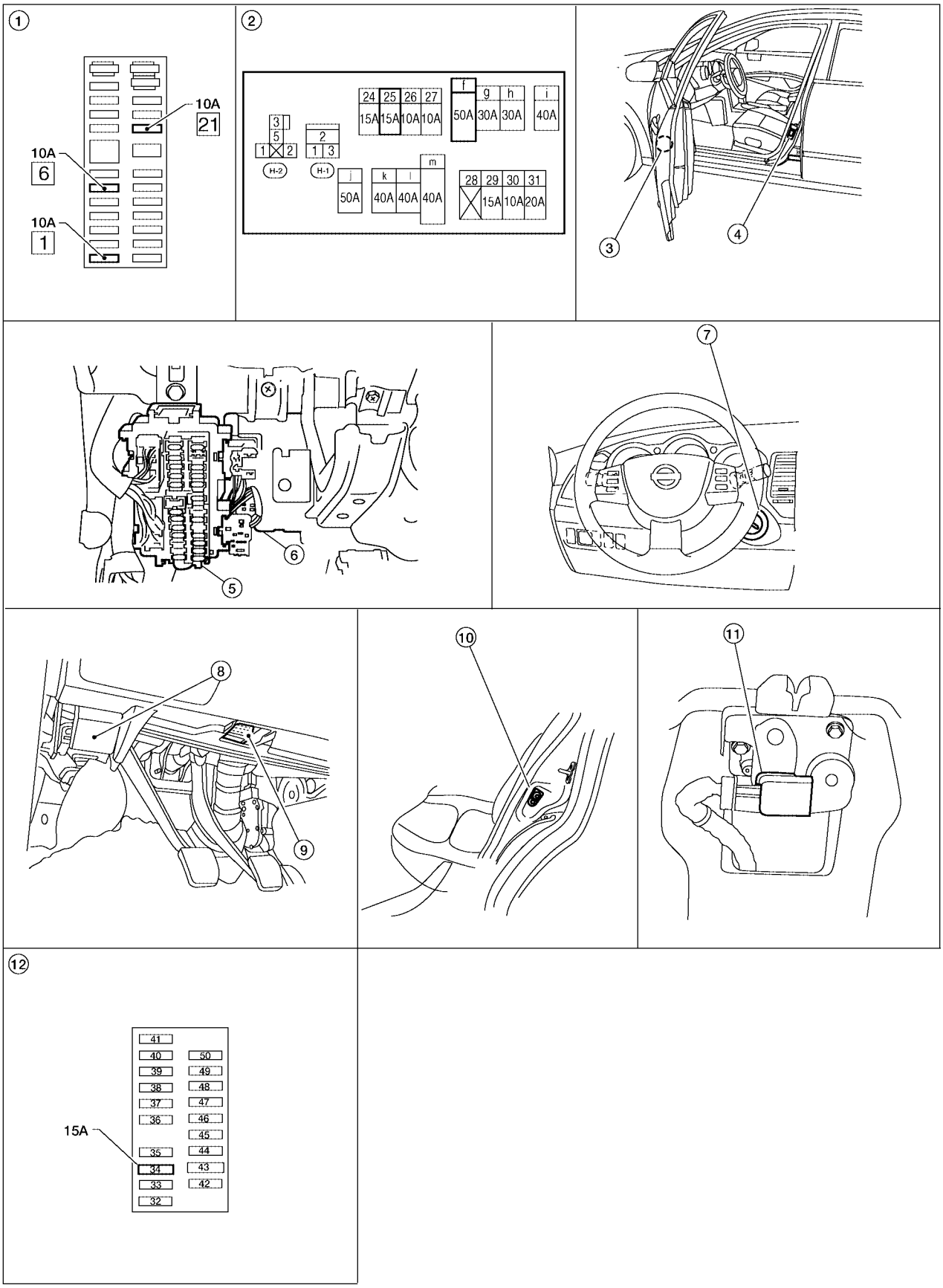


LIIA2351E

| | | |
|---|---|---|
| 1. Fuse block (J/B) | 2. Fuse and fusible link box | 3. Front door lock assembly LH (key cylinder switch) D51 |
| 4. Front door switch LH B8<br>Front door switch RH B108 | 5. Fuse block (J/B)<br>(view with instrument panel removed) | 6. BCM M18, M19, M20<br>(view with instrument panel removed) |
| 7. Key switch and key lock solenoid M27 | 8. Hood opener handle | 9. Data link connector M22 |
| 10. Rear door switch LH B18<br>Rear door switch RH B116 | 11. Trunk lamp switch and trunk release solenoid T103 | 12. IPDM E/R fuse layout |

## System Description

EIS003QT

### INPUTS

Power is supplied at all times

- to BCM terminal 55
- through 50A fusible link (letter **f** , located in the fuse and fusible link box).
- to BCM terminal 42
- through 10A fuse [No. 21, located in the fuse block (J/B)].

When the ignition key is inserted, power is supplied

- to BCM terminal 37
- through key switch and key lock solenoid terminals 3 and 4
- through 10A fuse [No. 21, located in the fuse block (J/B)].

When the ignition switch is ACC or ON, power is supplied

- to BCM terminal 11
- through 10A fuse [No. 6, located in the fuse block (J/B)].

When the ignition switch is ON or START, power is supplied

- to BCM terminal 38
- through 10A fuse [No. 1, located in the fuse block (J/B)].

Ground is supplied

- to BCM terminal 52
- through body grounds M57, M61 and M79.

When the front door switch LH is ON (door is OPEN), ground is supplied

- to BCM terminal 62
- through front door switch LH terminal 2
- to front door switch LH case ground.

When the front door switch RH is ON (door is OPEN), ground is supplied

- to BCM terminal 12
- through front door switch RH terminal 2
- to front door switch RH case ground.

When the rear door switch LH is ON (door is OPEN), ground is supplied

- to BCM terminal 63
- through rear door switch LH terminal 1
- to rear door switch LH case ground.

When the rear door switch RH is ON (door is OPEN), ground is supplied

- to BCM terminal 13
- through rear door switch RH terminal 1
- to rear door switch RH case ground.

Keyfob signal is inputted to BCM (the antenna of the system is combined with BCM).
The remote keyless entry system controls operation of the

- power door lock
- trunk lid opener
- interior lamp and step lamps

- panic alarm
- hazard and horn reminder
- keyless power window down (open)
- auto door lock operation

## OPERATING PROCEDURE

### Power Door Lock Operation

BCM receives a LOCK signal from keyfob. BCM locks all doors with input of LOCK signal from keyfob.
When an UNLOCK signal is sent from keyfob once, driver's door will be unlocked.
Then, if an UNLOCK signal is sent from keyfob again within 5 seconds, all other doors will be unlocked.

### Hazard and Horn Reminder

BCM output to IPDM E/R for horn reminder signal as DATA LINE (CAN-H line and CAN-L line).
The hazard and horn reminder has C mode (horn chirp mode) and S mode (non-horn chirp mode).

**Operating function of hazard and horn reminder**

| | C mode | | S mode | |
|---|---|---|---|---|
| Keyfob operation | Lock | Unlock | Lock | Unlock |
| Hazard warning lamp flash | Twice | Once | Twice | — |
| Horn sound | Once | — | — | — |

**How to change hazard and horn reminder mode**

With CONSULT-II
Hazard and horn reminder can be changed using “WORK SUPPORT” mode in “MULTI ANSWER BACK SET".

Without CONSULT-II
Refer to Owner's Manual for instructions.

### Interior Lamp Operation

When the following input signals are both supplied:

- door switch CLOSED (when all the doors are closed);
- interior lamp switch is in DOOR position.

Remote keyless entry system turns on interior lamp and ignition illumination (for 30 seconds) with input of UNLOCK signal from keyfob.
For detailed description, refer to LT-155, "ROOM LAMP TIMER OPERATION" .

### Panic Alarm Operation

When key switch is OFF (when ignition key is not inserted in key cylinder), remote keyless entry system turns on and off horn and headlamp intermittently with input of PANIC ALARM signal from keyfob.
The alarm automatically turns off after 25 seconds or when BCM receives any signal from keyfob.
For detailed description, refer to BL-81, "VEHICLE SECURITY (THEFT WARNING) SYSTEM" .

### Trunk Lid Opener Operation

When a TRUNK OPEN signal is sent with key OFF (ignition key removed from key cylinder) from keyfob, power is supplied

- through BCM terminal 57
- to trunk lamp switch and trunk release solenoid terminal 1.

When power and ground are supplied, trunk lamp switch and trunk release solenoid opens trunk lid.

### Keyless Power Window Down (open) Operation

When keyfob unlock switch is turned ON with ignition switch OFF, and the switch is detected to be ON continuously for more than 1 second, the driver's door and passenger's door power windows are simultaneously opened.
Power window is operated to open and the operation continues as long as the keyfob unlock switch is pressed.

### Auto Door Lock Operation

After the unlock signal is sent from the keyfob and the door(s) unlock, the BCM starts a one minute timer and will re-lock the doors after the time elapses unless one of the following signals is sent:

- when door switch is turned ON for open.
- when the key switch is turned ON.
- when any signal is sent from the keyfob.

Auto door lock mode can be changed using "WORK SUPPORT" mode in "AUTO LOCK SET". Refer to BL-50, "CONSULT-II Application Items" .

## CAN Communication System Description

EIS003QU

Refer to LAN-25, "CAN COMMUNICATION" .

## Schematic

EIS003QV

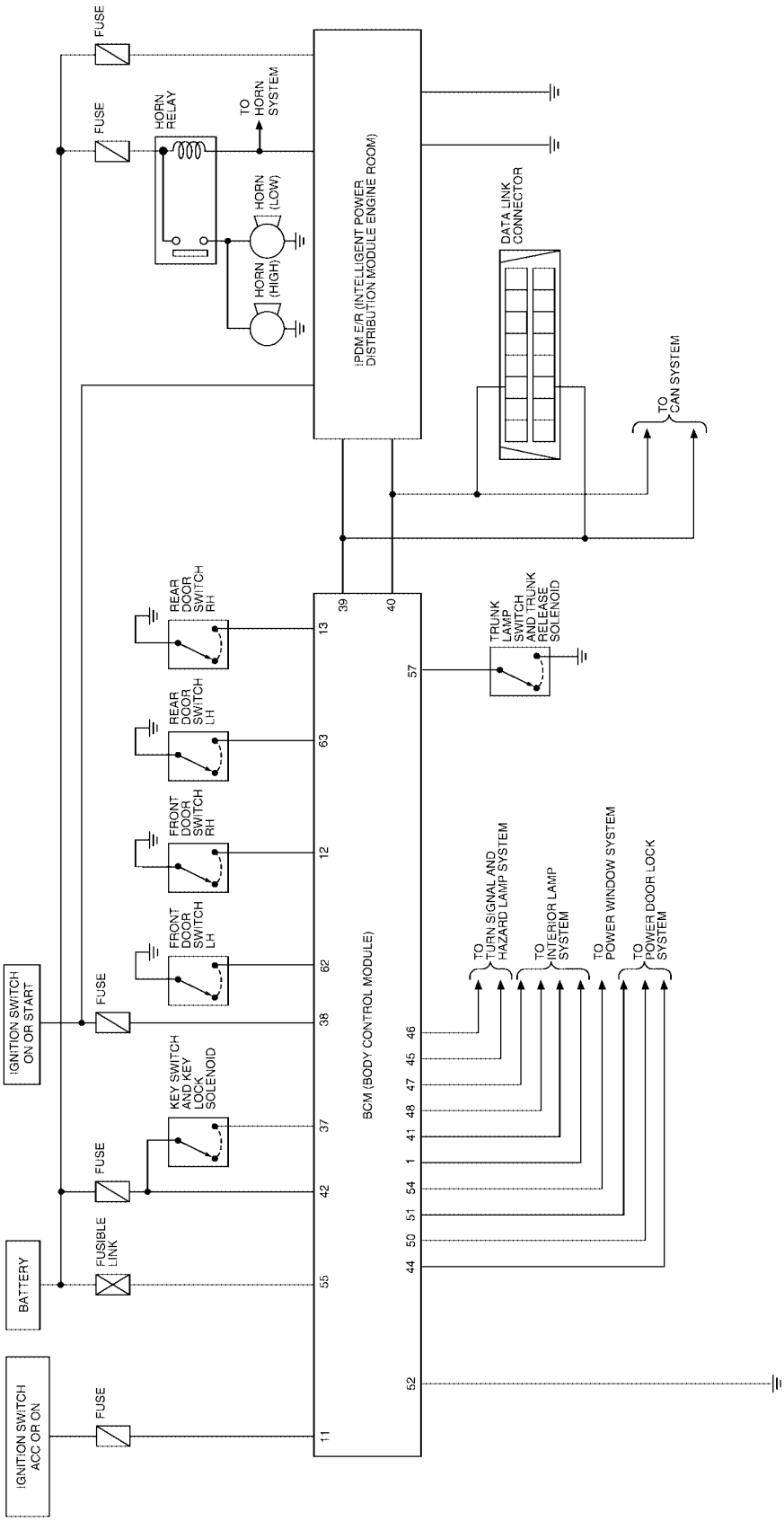


WIWA1261E

## Wiring Diagram — KEYLES—

EIS003QW

BL-KEYLES-01

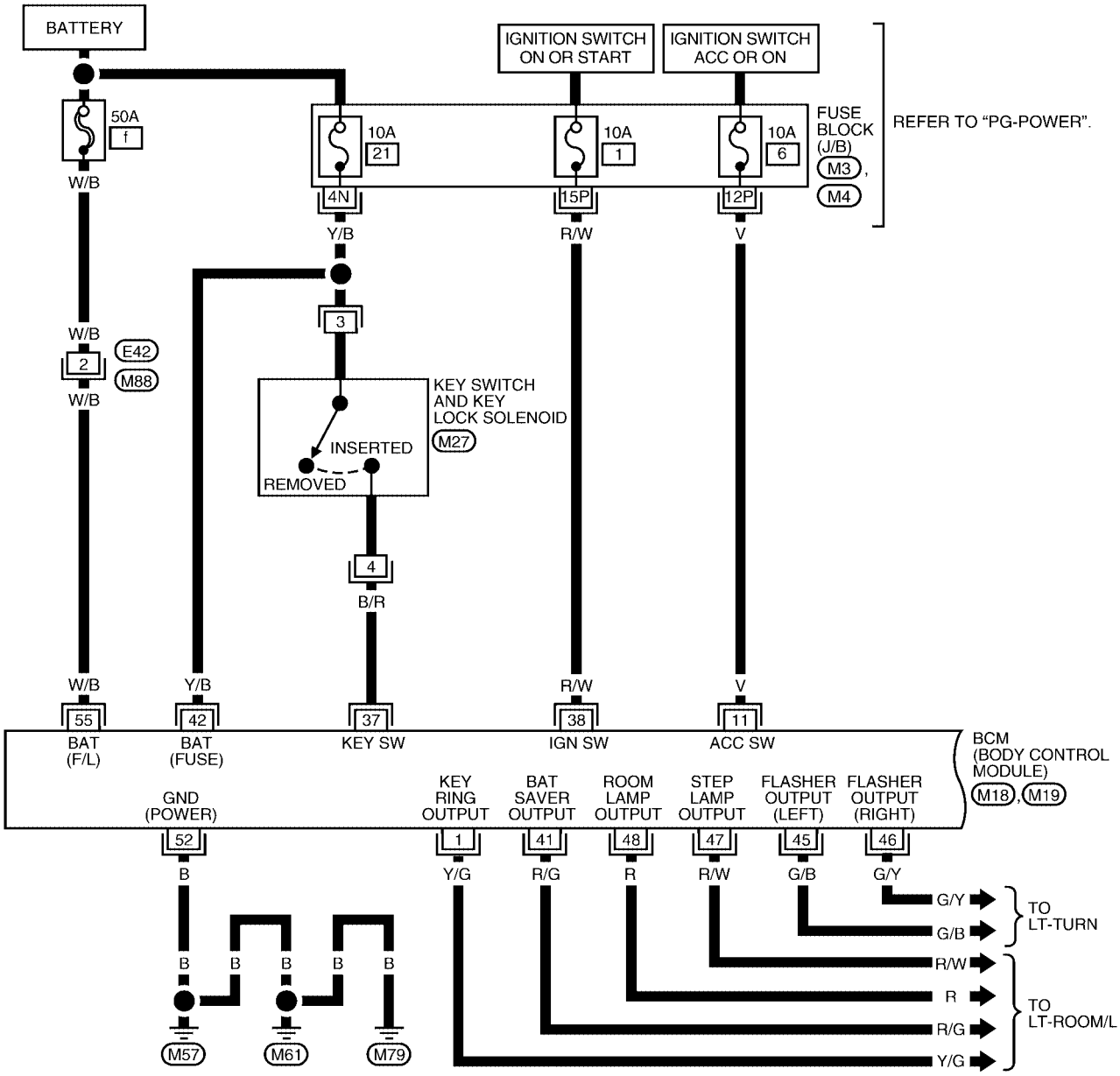


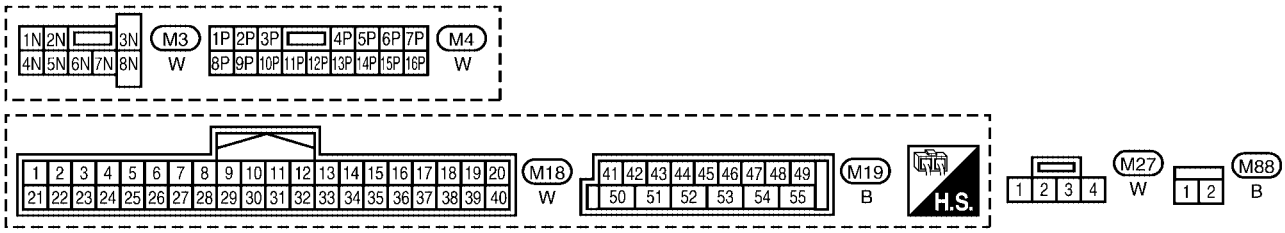


WIWA0330E

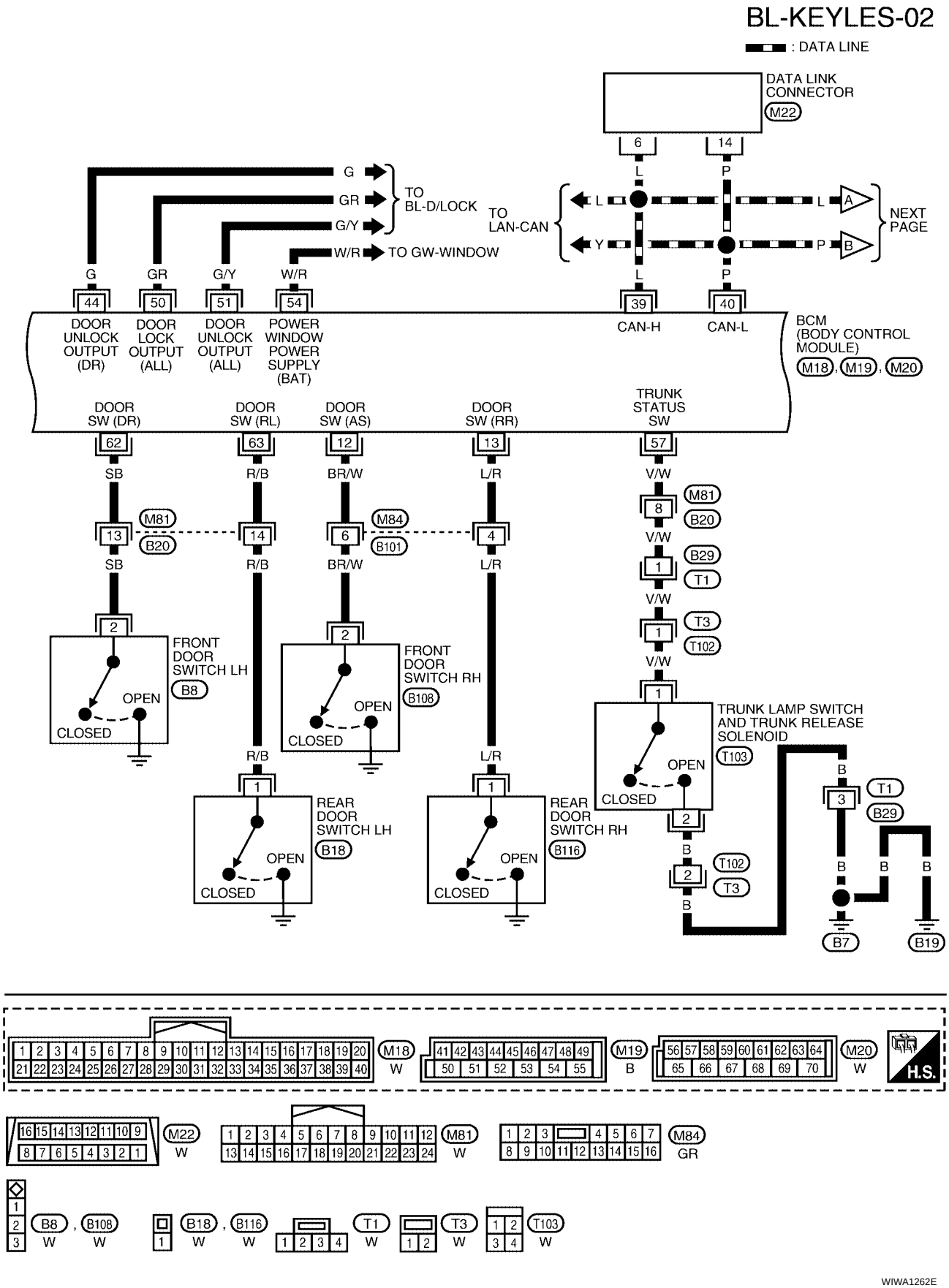
BL-KEYLES-02
: DATA LINE
DATA LINK CONNECTOR
M22
6
14
L
P
G
GR
G/Y
W/R
TO BL-D/LOCK
TO GW-WINDOW
TO LAN-CAN
NEXT PAGE
A
B
44
50
51
54
39
40
DOOR UNLOCK OUTPUT (DR)
DOOR LOCK OUTPUT (ALL)
DOOR UNLOCK OUTPUT (ALL)
POWER WINDOW POWER SUPPLY (BAT)
CAN-H
CAN-L
BCM (BODY CONTROL MODULE)
M18, M19, M20
DOOR SW (DR)
DOOR SW (RL)
DOOR SW (AS)
DOOR SW (RR)
TRUNK STATUS SW
62
63
12
13
57
SB
R/B
BR/W
L/R
V/W
M81
B20
M84
B101
8
B29
T1
T3
T102
FRONT DOOR SWITCH LH
B8
FRONT DOOR SWITCH RH
B108
OPEN
CLOSED
TRUNK LAMP SWITCH AND TRUNK RELEASE SOLENOID
T103
REAR DOOR SWITCH LH
B18
REAR DOOR SWITCH RH
B116
B
B7
B19
M18
M19
M20
M22
M81
M84
W
B
GR
H.S.
B8, B108
B18, B116
T1
T3
T103

WIWA1262E

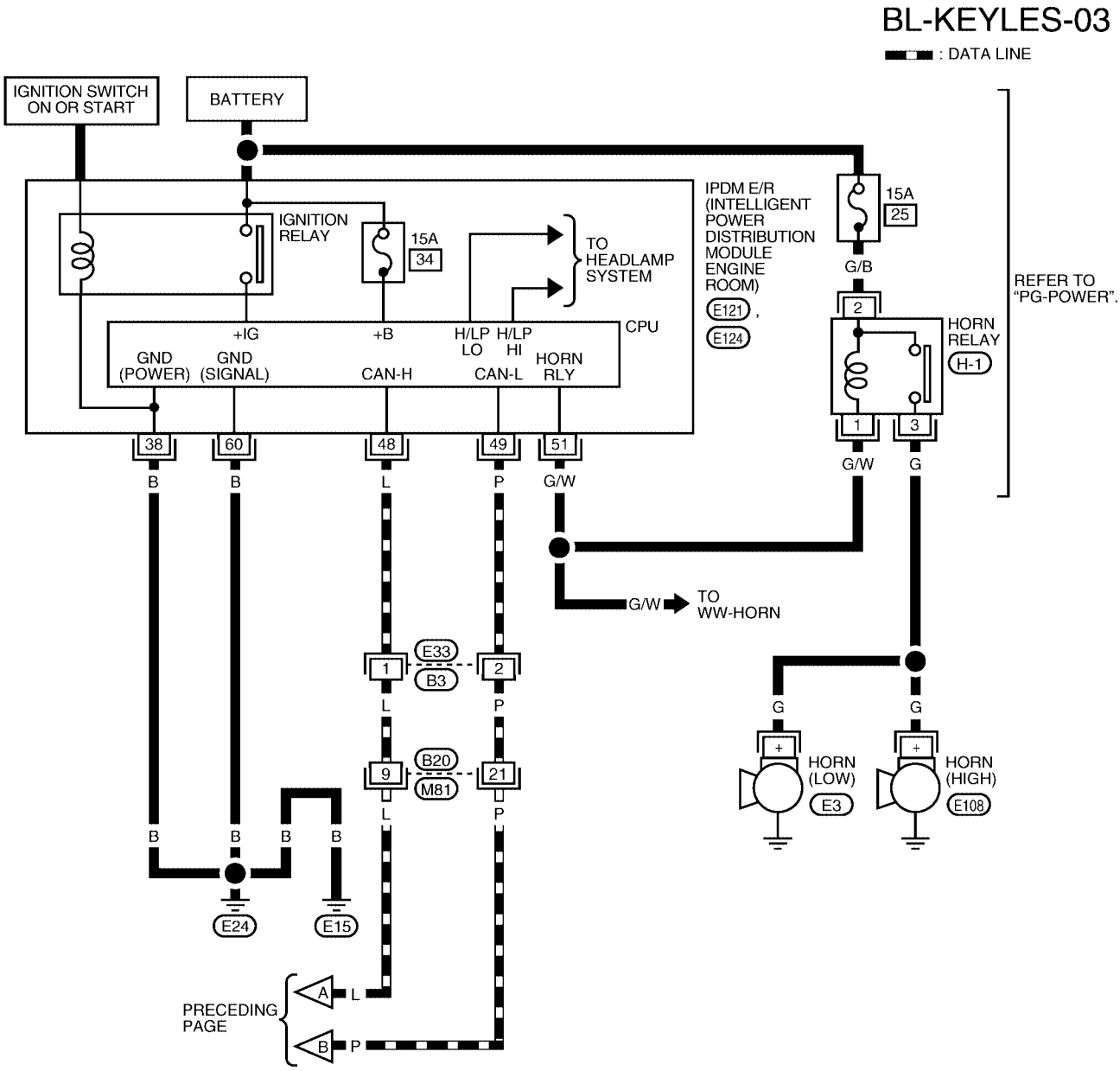


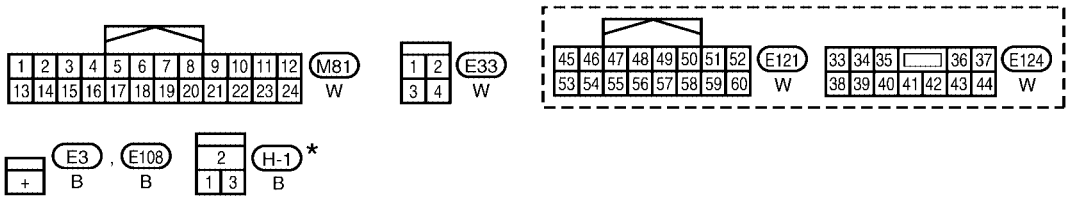


*: THIS CONNECTOR IS NOT SHOWN IN "HARNESS LAYOUT" OF PG SECTION.

WIWA1263E

## Terminals and Reference Value for BCM

EIS003QX

| Terminal | Wire Color | Item | Condition | Voltage (V) (Approx.) |
|---|---|---|---|---|
| 1 | Y/G | Ignition key illumination | Key ring illumination ON | 0 |
| | | | Key ring illumination OFF | Battery voltage |
| 11 | V | Ignition switch (ACC or ON) | Ignition switch (ACC or ON position) | Battery voltage |
| 12 | BR/W | Front door switch RH | Door Close (OFF) → Open (ON) | Battery voltage → 0 |
| 13 | L/R | Rear door switch RH | Door Close (OFF) → Open (ON) | Battery voltage → 0 |
| 37 | B/R | Key switch and key lock solenoid | Key inserted in ignition key cylinder → Key removed from ignition key cylinder | Battery voltage → 0 |
| 38 | R/W | Ignition switch (ON or START) | Ignition switch (ON or START position) | Battery voltage |
| 39 | L | CAN-H | — | — |
| 40 | P | CAN-L | — | — |
| 41 | R/G | Battery saver (Interior lamp) | Battery saver operated → Does not operate (ON → OFF) | Battery voltage → 0 |
| 42 | Y/B | Battery power supply | — | Battery voltage |
| 44 | G | Front door lock assembly LH (actuator) | Door lock & unlock switch (Neutral → Unlock) | 0 → Battery voltage |
| 45 | G/B | Turn signal LH | When doors are locked or unlocked using keyfob (OFF → ON) *2 | 0 → Battery voltage |
| 46 | G/Y | Turn signal RH | When doors are locked or unlocked using keyfob (OFF → ON) *2 | 0 → Battery voltage |
| 47 | R/W | Step lamp LH and RH | Step lamp ON | 0 |
| | | | Step lamp OFF | Battery voltage |
| 48 | R | Room lamp | Room lamp ON *1 | Battery voltage |
| | | | Room Lamp OFF *1 | 0 |
| 50 | GR | Door lock actuators | Door lock & unlock switch (Neutral → Lock) | 0 → Battery voltage |
| 51 | G/Y | Front door lock assembly RH and rear door lock actuators LH and RH | Door lock & unlock switch (Neutral → Unlock) | 0 → Battery voltage |
| 52 | B | Ground | — | 0 |
| 54 | W/R | Power window power source | — | Battery voltage |
| 55 | W/B | Battery power supply | — | Battery voltage |
| 57 | V/W | Trunk lamp switch and trunk release solenoid | Trunk Close (OFF) → Open (ON) | Battery voltage → 0 |
| 62 | SB | Front door switch LH | Door Close (OFF) → Open (ON) | Battery voltage → 0 |
| 63 | R/B | Rear door switch LH | Door Close (OFF) → Open (ON) | Battery voltage → 0 |

- *1: when room lamp switch is in "DOOR" position.
- *2: when hazard reminder is ON.

## Terminals and Reference Value for IPDM E/R

EIS003QY

| Terminal | Wire Color | Item | Condition | Voltage (V) (Approx.) |
|---|---|---|---|---|
| 38 | B | Ground | — | 0 |
| 48 | L | CAN-H | — | — |
| 49 | P | CAN-L | — | — |

| Terminal | Wire Color | Item | Condition | Voltage (V) (Approx.) |
|---|---|---|---|---|
| 51 | G/W | Horn relay | When doors locks are operated using keyfob (OFF → ON) * | Battery voltage → 0 |
| 60 | B | Ground | — | 0 |

*: when horn reminder is ON.

## CONSULT-II Function (BCM)

EIS003QZ

CONSULT-II can display each diagnostic item using the diagnostic test modes shown following.

| BCM diagnostic test item | Diagnostic mode | Description |
|---|---|---|
| Inspection by part | WORK SUPPORT | Supports inspections and adjustments. Commands are transmitted to the BCM for setting the status suitable for required operation, input/output signals are received from the BCM and received date is displayed. |
| | DATA MONITOR | Displays BCM input/output data in real time. |
| | ACTIVE TEST | Operation of electrical loads can be checked by sending drive signal to them. |
| | SELF-DIAG RESULTS | Displays BCM self-diagnosis results. |
| | CAN DIAG SUPPORT MNTR | The result of transmit/receive diagnosis of CAN communication can be read. |
| | ECU PART NUMBER | BCM part number can be read. |
| | CONFIGURATION | Performs BCM configuration read/write functions. |

## CONSULT-II Inspection Procedure

EIS003R0

### “MULTI REMOTE ENT”

**CAUTION:**

**If CONSULT-II is used with no connection of CONSULT-II CONVERTER, malfunctions might be detected in self-diagnosis depending on control unit which carries out CAN communication.**

1. Turn ignition switch OFF.
2. Connect CONSULT-II and CONSULT-II CONVERTER to the data link connector.

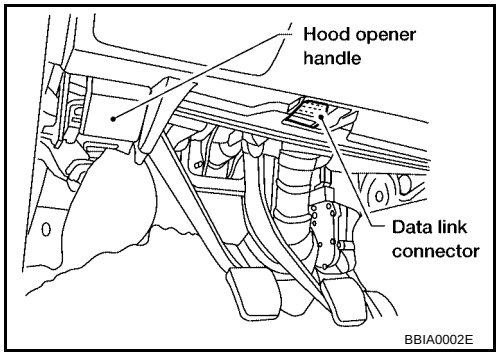


3. Turn ignition switch ON.
4. Touch “START NISSAN BASED VHCL”.

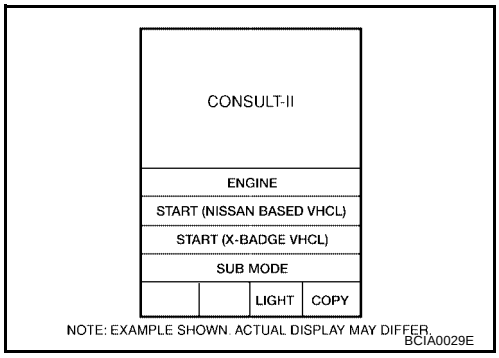

5. Touch “BCM”.
If "BCM" is not indicated, refer to GI-39, "CONSULT-II Data Link Connector (DLC) Circuit" .

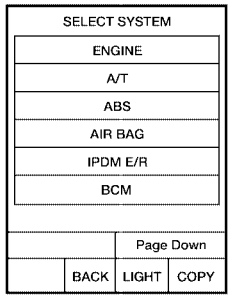

NOTE: EXAMPLE SHOWN. ACTUAL DISPLAY MAY DIFFER.
BCIA0030E

6. Select item to be diagnosed on "SELECT ITEM SCREEN": “MULTI REMOTE ENT”, "DOOR LOCK" or "INT LAMP".

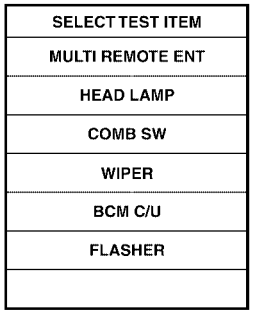

LIIA0194E

7. Select diagnosis mode.
“DATA MONITOR”, “ACTIVE TEST” and “WORK SUPPORT” are available.

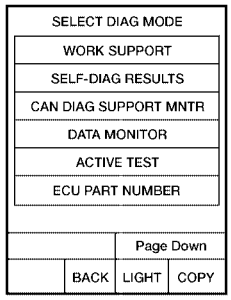

NOTE: EXAMPLE SHOWN. ACTUAL DISPLAY MAY DIFFER.
BCIA0031E

## CONSULT-II Application Items

EIS003R1

### Data Monitor

| Monitored Item | Description |
|---|---|
| IGN ON SW | Indicates [ON/OFF] condition of ignition switch in ON position. |
| KEY ON SW | Indicates [ON/OFF] condition of key switch. |
| ACC ON SW | Indicates [ON/OFF] condition of ignition switch in ACC position. |
| KEYLESS LOCK | Indicates [ON/OFF] condition of lock signal from keyfob. |
| KEYLESS UNLOCK | Indicates [ON/OFF] condition of unlock signal from keyfob. |
| KEYLESS PANIC | Indicates [ON/OFF] condition of panic signal from keyfob. |
| KEYLESS TRUNK | Indicates [ON/OFF] condition of trunk open signal from keyfob. |
| DOOR SW-DR | Indicates [ON/OFF] condition of front door switch LH. |
| DOOR SW-AS | Indicates [ON/OFF] condition of front door switch RH. |
| DOOR SW-RR | Indicates [ON/OFF] condition of rear door switch RH. |
| DOOR SW-RL | Indicates [ON/OFF] condition of rear door switch LH. |
| CDL LOCK SW | Indicates [ON/OFF] condition of lock signal from lock/unlock switch. |
| CDL UNLOCK SW | Indicates [ON/OFF] condition of unlock signal from lock/unlock switch. |
| RKE LCK-UNLCK | Indicates [ON/OFF] condition of lock/unlock signal at the same time from keyfob. |
| RKE KEEP UNLCK | Indicates [ON/OFF] condition of unlock signal from keyfob. |

### Active Test

| Test Item | Description |
|---|---|
| FLASHER RIGHT(CAN) | This test is able to check right hazard reminder operation. The right hazard lamp turns on when “ON” on CONSULT-II screen is touched. |
| FLASHER LEFT(CAN) | This test is able to check left hazard reminder operation. The left hazard lamp turns on when “ON” on CONSULT-II screen is touched. |
| POWER WINDOW DOWN | This test is able to check the power window motors operation. All power window motors are lowered when “ON” on CONSULT-II screen is touched. |
| HORN | This test is able to check panic alarm and horn reminder operations. The alarm activate for 0.5 seconds after “ON” on CONSULT-II screen is touched. |
| ALL LOCK | This test is able to check all door lock actuators lock operation. These actuators lock when "ON" on CONSULT–II screen is touched. |
| ALL UNLOCK | This test is able to check all door lock actuators unlock operation. These actuators unlock when "ON" on CONSULT–II screen is touched. |
| DR UNLOCK | This test is able to check front door lock actuator LH unlock operation.These actuators lock when "ON" on CONSULT–II screen is touched. |
| OTHER UNLOCK | This test is able to check door lock actuators (except front door lock actuator LH) unlock operation.These actuators unlock when "ON" on CONSULT–II screen is touched. |
| TRUNK/BACK DOOR | This test is able to check trunk lid opener actuator operation. The trunk is unlocked when “ON” on CONSULT-II screen is touched. |
| INT LAMP | This test is able to check interior lamp illumination operation. The interior lamp illumination is turned on when “ON” on CONSULT-II screen is touched. |
| IGN ILLUM | This test is able to check ignition illumination operation. The ignition illumination is turned on when “ON” on CONSULT-II screen is touched. |
| HEAD LAMP (HI) | This test is able to check headlamps panic alarm operation. The headlamp illuminates for 0.5 seconds after “ON” on CONSULT-II screen is touched. |
| TRUNK/BACK DOOR | This test is able to check trunk lid opener actuator operation. The trunk is unlocked when “ON” on CONSULT-II screen is touched. |

### Work Support

| Test Item | Description |
|---|---|
| REMO CONT ID REGIST | Keyfob ID code can be registered. |
| REMO CONT ID ERASUR | Keyfob ID code can be erased. |
| REMO CONT ID CONFIR | It can be checked whether keyfob ID code is registered or not in this mode. |
| HORN CHIRP SET | To enable or disable the horn chirp response when the keyfob is used. |
| HAZARD LAMP SET | To enable or disable the hazard lamp response when the keyfob is used. |
| MULTI ANSWER BACK SET | Hazard and horn reminder mode can be changed in this mode. The reminder mode will be changed when “CHANG SETT” on CONSULT-II screen is touched. |
| AUTO LOCK SET | Auto locking function mode can be changed in this mode. The function mode will be changed when "CHANG SETT" on CONSULT-II screen is touched. |
| PANIC ALRM SET | Panic alarm operation mode can be changed in this mode. The operation mode will be changed when "CHANG SETT" on CONSULT-II screen is touched. |
| TRUNK OPEN SET | Trunk lid opener operation mode can be changed in this mode. The operation mode will be changed when "CHANG SETT" on CONSULT-II screen is touched. |
| PW DOWN SET | Keyless power window down (open) operation mode can be changed in this mode. The operation mode will be changed when "CHANG SETT" on CONSULT-II screen is touched. |

### Hazard and horn reminder mode

| | MODE 1 (C mode) | | MODE 2 (S mode) | | MODE 3 | | MODE 4 | | MODE 5 | | MODE 6 | |
|---|---|---|---|---|---|---|---|---|---|---|---|---|
| Keyfob operation | Lock | Unlock | Lock | Unlock | Lock | Unlock | Lock | Unlock | Lock | Unlock | Lock | Unlock |
| Hazard warning lamp flash | Twice | Once | Twice | — | — | — | Twice | Once | Twice | — | — | Once |
| Horn sound | Once | — | — | — | — | — | — | — | Once | — | Once | — |

### Auto locking function mode

| | MODE 1 | MODE 2 | MODE 3 |
|---|---|---|---|
| Auto locking function | 5 minutes | Nothing | 1 minute |

### Panic alarm operation mode

| | MODE 1 | MODE 2 | MODE 3 |
|---|---|---|---|
| Keyfob operation | 0.5 seconds | Nothing | 1.5 seconds |

### Trunk lid open operation mode

| | MODE 1 | MODE 2 | MODE 3 |
|---|---|---|---|
| Keyfob operation | 0.5 seconds | Nothing | 1.5 seconds |

### Keyless power window down operation mode

| | MODE 1 | MODE 2 | MODE 3 |
|---|---|---|---|
| Keyfob operation | 3 seconds | Nothing | 5 seconds |

## Trouble Diagnosis Procedure

EIS003R2

1. Check the symptom and customer's requests.
2. Understand outline of system. Refer to BL-40, "System Description" .
3. Confirm that power door lock system operates normally. Refer to BL-17, "POWER DOOR LOCK SYSTEM" .
4. Perform pre-diagnosis inspection. Refer to BL-52, "Pre-Diagnosis Inspection" .
5. Refer to trouble diagnosis chart by symptom, repair or replace any malfunctioning parts. Refer to BL-52, "Trouble Diagnoses" .
6. Inspection End.

## Pre-Diagnosis Inspection

EIS003R3

### BCM POWER SUPPLY AND GROUND CIRCUIT INSPECTION

#### 1. CHECK FUSE AND FUSIBLE LINK

Check the following fuses and fusible link in the fuse block (J/B) and fuse and fusible link box.

| Unit | Terminal No. | Signal name | Ampere | No. | Location |
|---|---|---|---|---|---|
| BCM | 55 | Battery power supply | 50A | **f** | Fuse and fusible link box |
| | 11 | ACC or ON power supply | 10A | 6 | Fuse block (J/B) |
| | 38 | ON or START power supply | 10A | 1 | Fuse block (J/B) |

**NOTE:**
Refer to BL-17, "Component Parts and Harness Connector Location" .

OK or NG

OK >> GO TO 2.
NG >> If fuse is blown, be sure to eliminate cause of problem before installing new fuse, refer to PG-4, "POWER SUPPLY ROUTING CIRCUIT" .

#### 2. POWER SUPPLY CIRCUIT INSPECTION

Disconnect BCM connector, and connect vehicle-side connector terminals shown below to positive probe and body ground to negative probe. Measure voltage.

| Unit | Terminal No. | Signal name | Ignition switch | Voltage |
|---|---|---|---|---|
| BCM | 55 | Battery power supply | OFF | Battery voltage |
| | 11 | ACC or ON power supply | ACC or ON | Battery voltage |
| | 38 | ON or START power supply | ON or START | Battery voltage |

OK or NG

OK >> GO TO 3.
NG >> Repair or replace harness.

#### 3. GROUND CIRCUIT INSPECTION

Check continuity between BCM vehicle-side connector and body ground.

| Unit | Terminal No. | Signal name | Ignition switch | Continuity |
|---|---|---|---|---|
| BCM | 52 | Ground | OFF | Yes |

OK or NG

OK >> Power supply and ground circuits are normal.
NG >> Repair or replace harness.

## Trouble Diagnoses

EIS003R4

### SYMPTOM CHART

**NOTE:**

- Always check the "Trouble Diagnosis Procedure" before troubleshooting. Refer to BL-51, "Trouble Diagnosis Procedure" .
- Always check keyfob battery before replacing keyfob. Refer to BL-54, "Keyfob Battery and Function Check" .
- The panic alarm operation and trunk lid opener operation of remote keyless entry system do not activate with the ignition key inserted in the ignition key cylinder.
- Use Remote Keyless Entry Tester J-43241 (follow instructions on tester) to check operation of keyfob before replacing keyfob.

| Symptom | Diagnoses/service procedure | Reference page |
|---|---|---|
| All functions of remote keyless entry system do not operate. | 1. Keyfob battery and function check (use Remote Keyless Entry Tester J-43241)<br>**NOTE:**<br>If the result of keyfob function check is OK, keyfob is not malfunctioning. | BL-54 |
| | 2. Replace keyfob. Refer to ID Code Entry Procedure. | BL-63 |
| | 3. Replace BCM. | BCS-20 |
| The new ID of keyfob cannot be entered. | 1. Keyfob battery and function check (use Remote Keyless Entry Tester J-43241)<br>**NOTE:**<br>If the result of keyfob function check is OK, keyfob is not malfunctioning. | BL-54 |
| | 2. Key switch (insert) check | BL-60 |
| | 3. Door switch check | BL-58 |
| | 4. ACC power check | BL-56 |
| | 5. Replace keyfob. Refer to ID Code Entry Procedure. | BL-63 |
| | 6. Replace BCM. | BCS-20 |
| Door lock or unlock does not function.<br>(If the power door lock system does not operate manually, check power door lock system. Refer to BL-17, "POWER DOOR LOCK SYSTEM" ) | 1. Keyfob battery and function check (use Remote Keyless Entry Tester J-43241)<br>**NOTE:**<br>If the result of keyfob function check is OK, keyfob is not malfunctioning. | BL-54 |
| | 2. Replace keyfob. Refer to ID Code Entry Procedure. | BL-63 |
| | 3. Replace BCM. | BCS-20 |
| Hazard and horn reminder does not activate properly when pressing lock or unlock button of keyfob. | 1. Check hazard and horn reminder mode<br>**NOTE:**<br>Hazard and horn reminder mode can be changed.<br>First check the hazard and horn reminder mode setting. | BL-50 |
| | 2. Door switch check | BL-58 |
| | 3. Trunk switch check | BL-61 |
| | 4. Replace BCM. | BCS-20 |
| Hazard reminder does not activate properly when pressing lock or unlock button of keyfob.<br>(Horn reminder OK) | 1. Check hazard reminder mode<br>**NOTE:**<br>Hazard reminder mode can be changed.<br>First check the hazard reminder mode setting. | BL-50 |
| | 2. Check hazard function with hazard switch | — |
| | 3. Replace BCM. | BCS-20 |
| Horn reminder does not activate properly when pressing lock or unlock button of keyfob.<br>(Hazard reminder OK) | 1. Check horn reminder mode<br>**NOTE:**<br>Horn reminder mode can be changed.<br>First check the horn reminder mode setting. | BL-50 |
| | 2. Check horn function with horn switch | — |
| | 3. IPDM E/R operation check | BL-56 |
| | 4. Replace BCM. | BCS-20 |
| Room lamp, ignition key illumination and step lamp operation do not activate properly. | 1. Room lamp operation check | BL-62 |
| | 2. Ignition key illumination operation check | BL-62 |
| | 3. Step lamp operation check | LT-153 |
| | 4. Door switch check | BL-58 |
| | 5. Replace BCM. | BCS-20 |

| Symptom | Diagnoses/service procedure | Reference page |
|---|---|---|
| Panic alarm (horn and headlamp) does not activate when panic alarm button is continuously pressed. | 1. Keyfob battery and function check (use Remote Keyless Entry Tester J-43241)<br>**NOTE:**<br>If the result of keyfob function check is OK, keyfob is not malfunctioning. | BL-54 |
| | 2. Vehicle security operation check.<br>Refer to Vehicle security system. | BL-81 |
| | 3. Key switch (insert) check | BL-60 |
| | 4. Replace keyfob. Refer to ID Code Entry Procedure. | BL-63 |
| | 5. Replace BCM. | BCS-20 |
| Trunk lid does not open when trunk opener button is continuously pressed. | 1. Check trunk open operation mode<br>**NOTE:**<br>Trunk open operation mode can be changed.<br>First check the trunk open operation mode setting. | BL-50 |
| | 2. Keyfob battery and function check (use Remote Keyless Entry Tester J-43241)<br>**NOTE:**<br>If the result of keyfob function check is OK, keyfob is not malfunctioning. | BL-54 |
| | 3. Trunk release solenoid check | BL-61 |
| | 4. Key switch (insert) check | BL-60 |
| | 5. Replace BCM. | BCS-20 |
| Auto door lock operation does not activate properly.<br>(All other remote keyless entry functions OK.) | 1. Check auto door lock operation mode<br>**NOTE:**<br>Auto door lock operation mode can be changed.<br>First check the auto door lock operation mode setting. | BL-50 |
| | 2. Replace BCM. | BCS-20 |
| Keyless power window down (open) operation does not activate properly.<br>(All other remote keyless entry functions OK.) | 1. Check power window down operation mode<br>**NOTE:**<br>Power window down operation mode can be changed.<br>First check the power window down operation mode setting. | BL-50 |
| | 2. Check power window function with switch | — |
| | 3. Replace BCM. | BCS-20 |

## Keyfob Battery and Function Check

EIS003R5

### 1. CHECK KEYFOB BATTERY

Remove battery and measure voltage across battery positive and negative terminals, (+) and (–).

**Voltage : 2.5V - 3.0V**

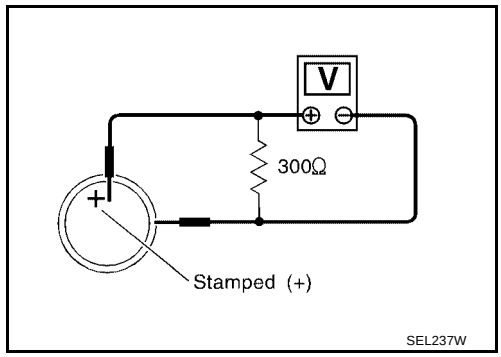


**NOTE:**
Keyfob does not function if battery is not installed correctly.

OK or NG

OK >> GO TO 2.
NG >> Replace battery. Refer to BL-66, "Keyfob Battery Replacement" .

## 2. CHECK KEYFOB FUNCTION

**With CONSULT-II**

Check keyfob function in “DATA MONITOR” mode with CONSULT-II.

**When pushing each button of keyfob, the corresponding monitor item should be turned as follows.**

| Condition | Monitor item | |
|---|---|---|
| Pushing LOCK | KEYLESS LOCK | : ON |
| Pushing UNLOCK | KEYLESS UNLOCK | : ON |
| Keep pushing UNLOCK | RKE KEEP UNLK | : ON |
| | UN BUTTON ON turns to ON 3 seconds after UNLOCK button is pushed. | |
| Pushing TRUNK | KEYLESS TRUNK | : ON |
| Pushing PANIC | KEYLESS PANIC | : ON |
| Pushing LOCK and UNLOCK at the same time | RKE LCK-UNLCK | : ON |

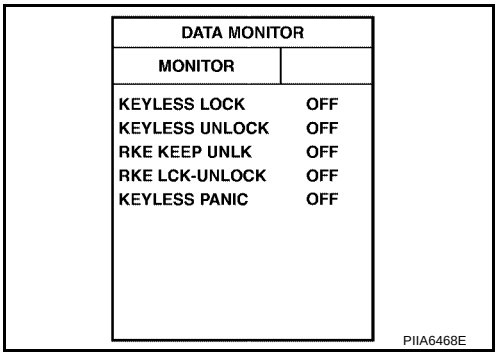


**Without CONSULT-II**

Check keyfob function using Remote Keyless Entry Tester J-43241.

OK or NG

OK >> WITH CONSULT-II: Replace BCM. Refer to BCS-20, "BCM" .

OK >> WITHOUT CONSULT-II: Keyfob is OK. Further inspection is necessary. Refer to BL-52, "SYMPTOM CHART" .

NG >> WITH CONSULT-II: Further inspection is necessary. Refer to BL-52, "SYMPTOM CHART" .

NG >> WITHOUT CONSULT-II: Replace keyfob. Refer to BL-65, "KEYFOB ID SET UP WITHOUT CONSULT-II" .

## ACC Power Check

EIS003R6

### 1. CHECK ACC POWER

With CONSULT-II

Check key switch "ACC ON SW" in DATA MONITOR mode with CONSULT–II. Refer to BL-50, "CONSULT-II Application Items" .

| Monitor Item | Condition | |
|---|---|---|
| ACC ON SW | Ignition switch position is ACC | : ON |
| | Ignition switch position is OFF | : OFF |

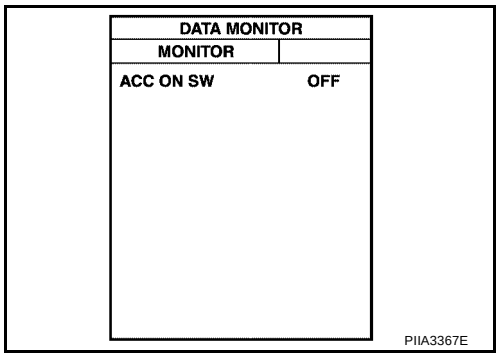


Without CONSULT-II

Check voltage between BCM connector M18 terminal 11 and ground.

| Connector | Terminals | | Condition | Voltage (V) (Approx.) |
|---|---|---|---|---|
| | ( + ) | ( – ) | | |
| M18 | 11 | Ground | ACC | Battery voltage |
| | | | OFF | 0 |

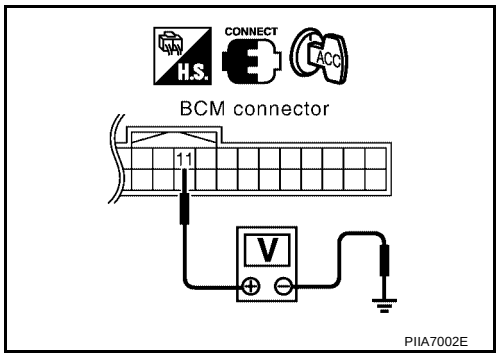


OK or NG

OK >> ACC power circuit is OK.

NG >> Check the following:

- 10A fuse [No. 6, located in fuse block (J/B)]
- Harness for open or short.

## IPDM E/R Operation Check

EIS003R7

### 1. CHECK IPDM E/R INPUT VOLTAGE

Check voltage between IPDM E/R connector E121 terminal 51 and ground.

| Connector | Terminals | | Voltage (V) (Approx.) |
|---|---|---|---|
| | ( + ) | ( – ) | |
| E121 | 51 | Ground | Battery voltage |

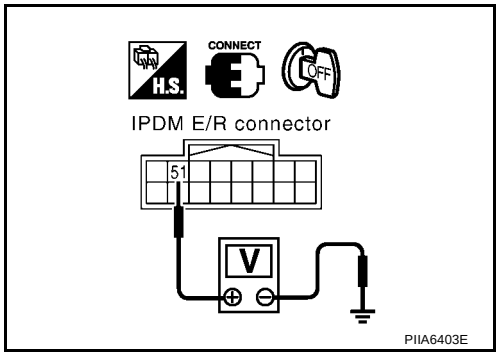


OK or NG

OK >> Replace IPDM E/R. Refer to PG-30, "Removal and Installation of IPDM E/R" .

NG >> GO TO 2.

## 2. CHECK IPDM E/R INPUT VOLTAGE

1. Turn ignition switch OFF.
2. Disconnect IPDM E/R and horn relay.
3. Check continuity between IPDM E/R connector E121 terminal 51 and horn relay connector H-1 terminal 1.

**51 - 1 : Continuity should exist.**

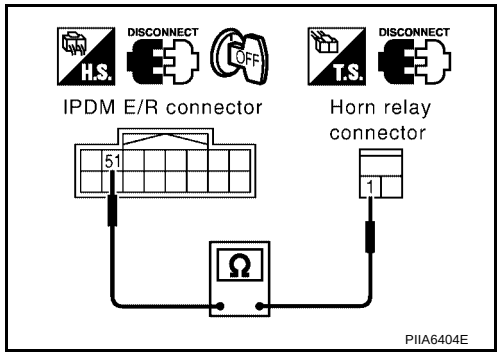


OK or NG

OK >> Further inspection is necessary. Refer to BL-52, "SYMPTOM CHART" .

NG >> Repair or replace harness.

## Door Switch Check

EIS003R8

### 1. CHECK DOOR SWITCH INPUT SIGNAL

**With CONSULT-II**

Check door switches (“DOOR SW-RL”, “DOOR SW-RR”, “DOOR SW-DR” and “DOOR SW-AS”) in “DATA MONITOR” mode with CONSULT-II.

| Monitor item | Condition | |
|---|---|---|
| DOOR SW-RL | OPEN | : ON |
| | CLOSE | : OFF |
| DOOR SW-RR | OPEN | : ON |
| | CLOSE | : OFF |
| DOOR SW-DR | OPEN | : ON |
| | CLOSE | : OFF |
| DOOR SW-AS | OPEN | : ON |
| | CLOSE | : OFF |

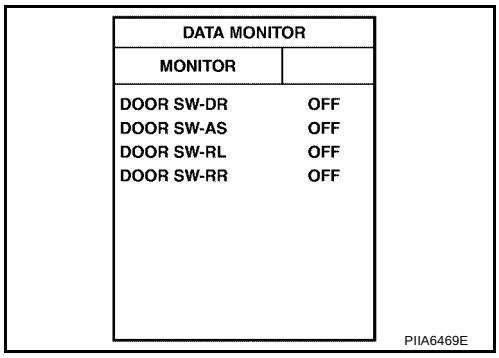


**Without CONSULT-II**

Check voltage between BCM harness connectors M18, M20 terminals 12, 13, 62 and 63 and ground.

| Component | Terminals ( + ) | Terminals ( - ) | Condition | Voltage (V) (Approx.) |
|---|---|---|---|---|
| Front door switch RH | 12 | Ground | OPEN | 0 |
| | | | CLOSE | Battery voltage |
| Rear door switch RH | 13 | Ground | OPEN | 0 |
| | | | CLOSE | Battery voltage |
| Front door switch LH | 62 | Ground | OPEN | 0 |
| | | | CLOSE | Battery voltage |
| Rear door switch LH | 63 | Ground | OPEN | 0 |
| | | | CLOSE | Battery voltage |

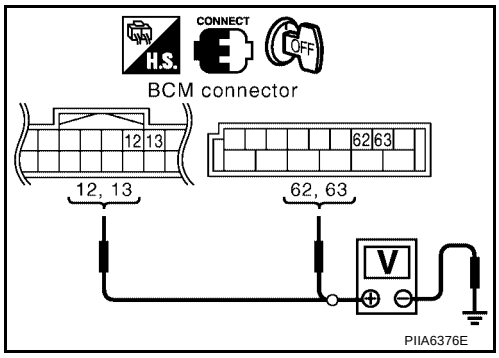


OK or NG

OK >> Door switch circuit is OK.
NG >> GO TO 2.

## 2. CHECK DOOR SWITCH CIRCUIT

1. Turn ignition switch OFF.
2. Disconnect door switch and BCM.
3. Check continuity between door switch connector B8 (front LH) or B108 (front RH) terminal 2, B18 (rear LH) or B116 (rear RH) terminal 1 and BCM connector M18, M20 terminals 12, 13, 62 and 63

**2 - 62 : Continuity should exist.**
**2 - 12 : Continuity should exist.**
**1 - 63 : Continuity should exist.**
**1 - 13 : Continuity should exist.**

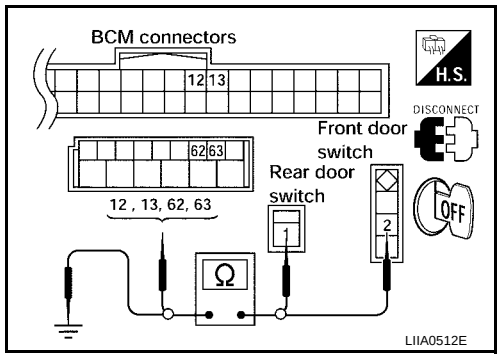


4. Check continuity between door switch connector B8 (front LH) or B108 (front RH) terminal 2, B18 (rear LH) or B116 (rear RH) terminal 1 and ground.

**2 - Ground : Continuity should not exist.**
**1 - Ground : Continuity should not exist.**

OK or NG

OK >> GO TO 3.
NG >> Repair or replace harness.

## 3. CHECK DOOR SWITCHES

Check continuity between door switch connector terminals 1, 2 and ground part of door switch.

| | Terminals | Condition | Continuity |
|---|---|---|---|
| Front door switch LH/RH | 2 – Ground part of door switch | Released | Yes |
| | | Pushed | No |
| Rear door switch LH/RH | 1 – Ground part of door switch | Released | Yes |
| | | Pushed | No |

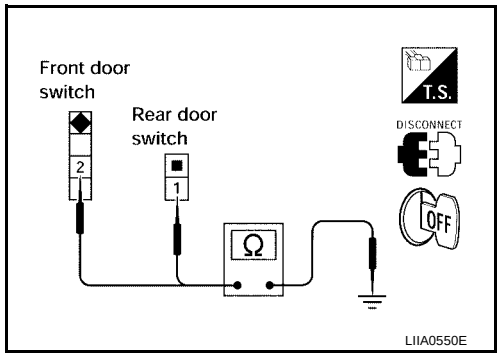


OK or NG

OK >> Check door switch case ground condition.
NG >> Replace door switch.

## Key Switch and Key Lock Solenoid Check

EIS003R9

### 1. CHECK KEY SWITCH AND KEY LOCK SOLENOID INPUT SIGNAL

With CONSULT-II

Check key switch "KEY ON SW" in DATA MONITOR mode with CONSULT–II. Refer to BL-50, "CONSULT-II Application Items" .

- When key is inserted to ignition key cylinder:

  **KEY ON SW : ON**

- When key is removed from ignition key cylinder:

  **KEY ON SW : OFF**

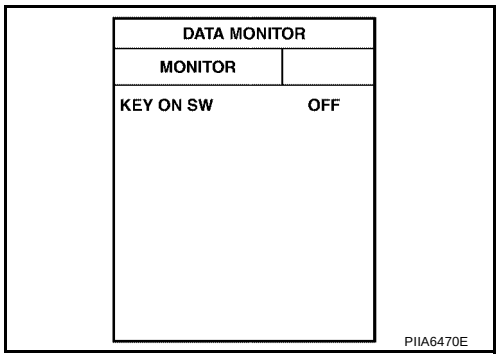


Without CONSULT-II

Check voltage between BCM connector M18 terminal 37 and ground.

| Connector | Terminals | | Condition | Voltage (V) (Approx.) |
|---|---|---|---|---|
| | ( + ) | ( – ) | | |
| M18 | 37 | Ground | Key is inserted. | Battery voltage |
| | | | Key is removed. | 0 |

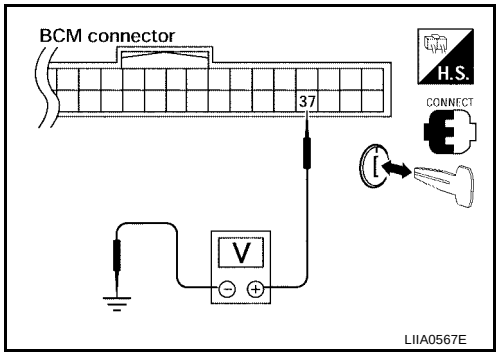


OK or NG

OK >> Key switch and key lock solenoid circuit is OK.

NG >> GO TO 2.

### 2. CHECK KEY SWITCH (INSERT)

1. Disconnect key switch and key lock solenoid.
2. Check continuity between key switch and key lock solenoid terminals 1, 2.

| Terminals | Condition | Continuity |
|---|---|---|
| 1 – 2 | Key is inserted. | Yes |
| | Key is removed. | No |

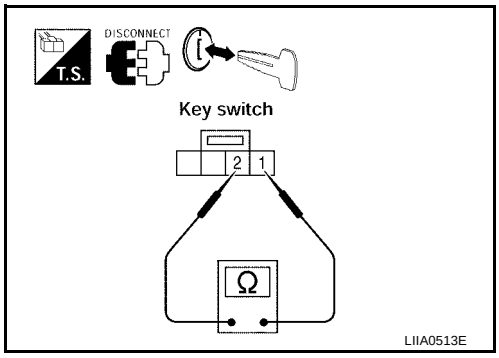


OK or NG

OK >> Repair or replace harness.

NG >> Replace key switch.

## Trunk Lamp Switch and Trunk Release Solenoid Check

EIS003RA

### 1. CHECK TRUNK LID OPENER

Check trunk release operation with trunk lid opener switch.

**NOTE:**
First check trunk lid opener cancel switch position. Refer to BL-76, "TRUNK LID AND FUEL FILLER LID OPENER"

Does trunk lid open?

YES >> Trunk lamp switch and trunk release solenoid circuit is OK.
NO >> GO TO 2.

### 2. CHECK TRUNK LAMP SWITCH AND TRUNK RELEASE SOLENOID OPERATION

**With CONSULT-II**

1. Select “ACTIVE TEST” in “MULTI REMOTE ENT” with CONSULT-II.
2. Select “TRUNK/BACK DOOR” and touch “ON”.

   **Trunk release solenoid should operate.**

   **NOTE:**
   If CONSULT-II is not available, GO TO 3.

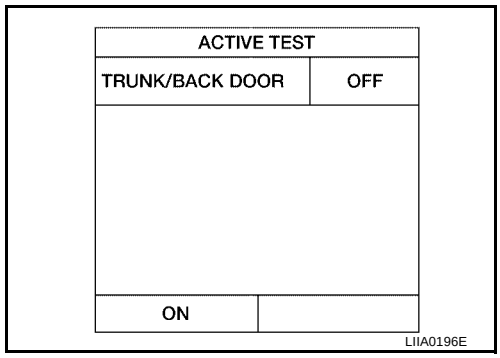


OK or NG

OK >> Trunk lamp switch and trunk release solenoid circuit is OK.
NG >> Repair or replace harness.

### 3. CHECK TRUNK LAMP SWITCH AND TRUNK RELEASE SOLENOID CIRCUIT

**Without CONSULT-II**

1. Disconnect trunk lamp switch and trunk release solenoid.
2. Check voltage between trunk lamp switch and trunk release solenoid harness connector T103 terminal 3 and ground.

   **3 - Ground : Battery voltage should exist.**

3. Check continuity between trunk lamp switch and trunk release solenoid harness connector T103 terminal 4 and ground.

   **4 - Ground : Continuity should exist.**

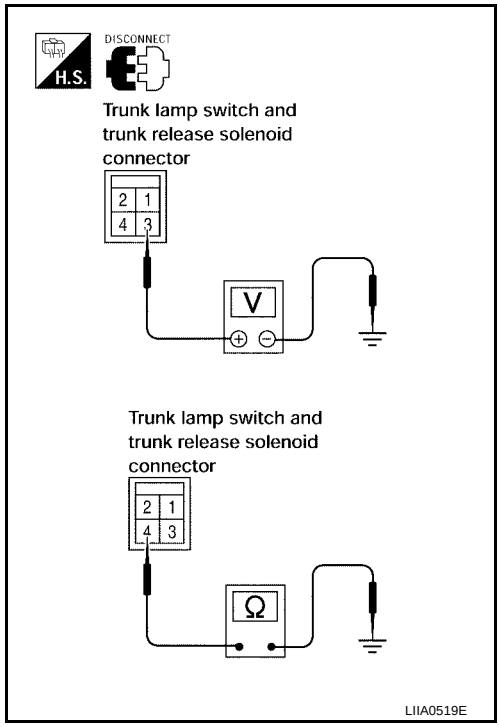


OK or NG

OK >> Replace trunk lamp switch and trunk release solenoid. Refer to BL-78, "Removal and Installation of Trunk Lid Lock" .
NG >> Repair or replace harness.

## Check Hazard Function

EIS003RB

### 1. CHECK HAZARD WARNING LAMP

Does hazard indicator flash with hazard switch?

Yes or No

YES >> Hazard warning lamp circuit is OK.
NO >> Check hazard indicator. Refer to LT-92, "TURN SIGNAL AND HAZARD WARNING LAMPS" .

## Check Horn Function

EIS003RC

First, perform the "SELF-DIAG RESULTS" in "BCM" with CONSULT-II, then perform the trouble diagnosis of malfunction system indicated in "SELF-DIAG RESULTS" of "BCM".

### 1. CHECK HORN FUNCTION

Does horn sound with horn switch?

Yes or No

YES >> Horn circuit is OK.
NO >> Check horn circuit. Refer to WW-31, "HORN" .

## Check Headlamp Function

EIS003RD

First, perform the "SELF-DIAG RESULTS" in "BCM" with CONSULT-II, then perform the trouble diagnosis of malfunction system indicated in "SELF-DIAG RESULTS" of "BCM".

### 1. CHECK HEADLAMP OPERATION

Does headlamp come on when turning lighting switch ON?

Yes or No

YES >> Headlamp operation circuit is OK.
NO >> Check headlamp circuit. Refer to LT-6, "HEADLAMP (FOR USA)" .

## Check Map Lamp and Ignition Key Illumination Function

EIS003RE

### 1. CHECK MAP LAMP AND IGNITION KEY ILLUMINATION FUNCTION

When map lamp switch is in DOOR position, open the front door LH or RH.

**Map lamp and ignition key illumination should illuminate.**

OK or NG

OK >> System is OK.
NG >> Check ignition illumination circuit. Refer to LT-177, "ILLUMINATION" .

## ID Code Entry Procedure

EIS003RF

### KEYFOB ID SET UP WITH CONSULT-II

**NOTE:**

- **If a keyfob is lost, the ID code of the lost keyfob must be erased to prevent unauthorized use. A specific ID code can be erased with CONSULT-II. However, when the ID code of a lost keyfob is not known, all controller ID codes should be erased. After all ID codes are erased, the ID codes of all remaining and/or new keyfobs must be re-registered.**
- **When registering an additional keyfob, the existing ID codes in memory may or may not be erased. If five ID codes are stored in memory when an additional code is registered, only the oldest code is erased. If less than five codes are stored in memory when an additional code is registered, the new ID code is added and no ID codes are erased.**
- **Entry of a maximum of five ID codes is allowed. When more than five codes are entered, the oldest ID code will be erased.**
- **Even if the same ID code that is already in memory is input, the same ID code can be entered. The code is counted as an additional code.**

**CAUTION:**

**If CONSULT-II is used with no connection of CONSULT-II CONVERTER, malfunctions might be detected in self-diagnosis depending on control unit which carries out CAN communication.**

1. Turn ignition switch OFF.
2. Connect CONSULT-II and CONSULT-II CONVERTER to the data link connector.

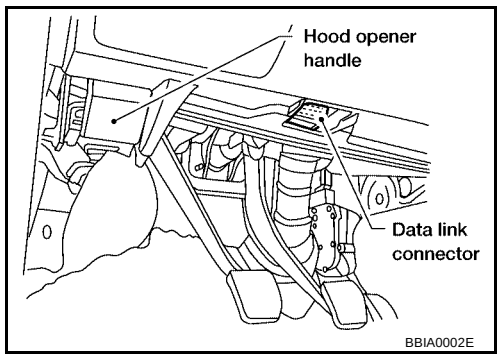


3. Turn ignition switch ON.
4. Touch “START (NISSAN BASED VHCL)”.

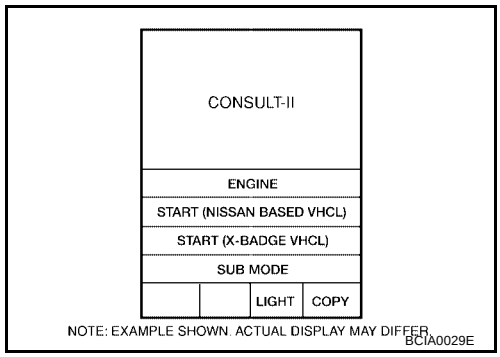


5. Touch “BCM”.
   If "BCM" is not indicated, refer to GI-39, "CONSULT-II Data Link Connector (DLC) Circuit" .

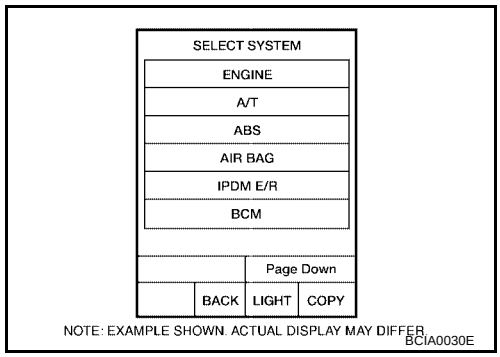

6. Touch “MULTI REMOTE ENT”.

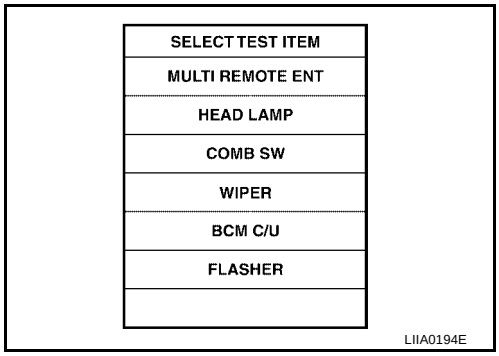


7. Touch “WORK SUPPORT”.

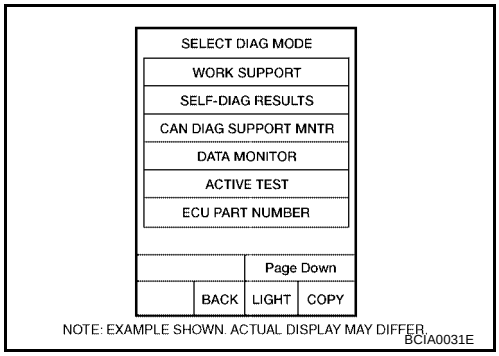


8. The items are shown on the figure at left can be set up.
   - “REMO CONT ID CONFIR”
     Use this mode to confirm if a keyfob ID code is registered or not.
   - “REMO CONT ID REGIST”
     Use this mode to register a keyfob ID code.
     **NOTE:**
     **Register the ID code when keyfob or BCM is replaced, or when additional keyfob is required.**
   - “REMO CONT ID ERASUR”
     Use this mode to erase a keyfob ID code.

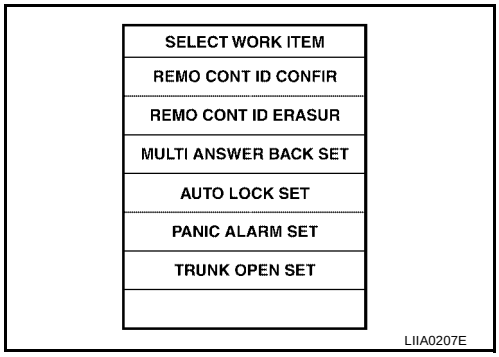

## KEYFOB ID SET UP WITHOUT CONSULT-II

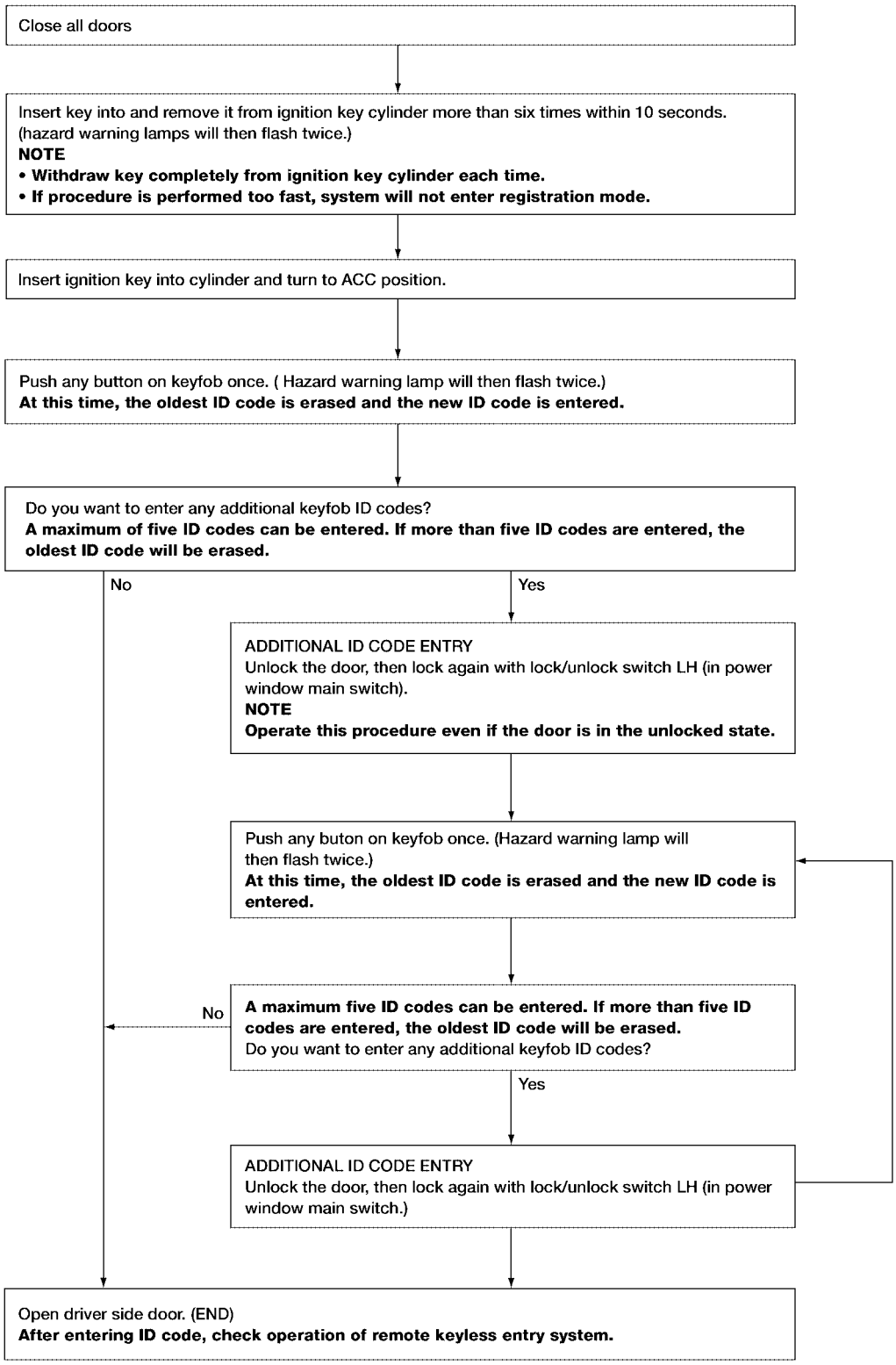


LIIA1513E

**NOTE:**

- If a keyfob is lost, the ID code of the lost keyfob must be erased to prevent unauthorized use. A specific ID code can be erased with CONSULT-II. However, when the ID code of a lost keyfob is not known, all controller ID codes should be erased. After all ID codes are erased, the ID codes of all remaining and/or new keyfobs must be re-registered.
  To erase all ID codes in memory, register one ID code (keyfob) five times. After all ID codes are erased, the ID codes of all remaining and/or new keyfobs must be re-registered.
- When registering an additional keyfob, the existing ID codes in memory may or may not be erased. If five ID codes are stored in memory, when an additional code is registered, only the oldest code is erased. If less than five ID codes are stored in memory, when an additional ID code is registered, the new ID code is added and no ID codes are erased.
- If you need to activate more than two additional new keyfobs, repeat the procedure “Additional ID code entry” for each new keyfob.
- Entry of maximum five ID codes is allowed. When more than five ID codes are entered, the oldest ID code will be erased.
- Even if same ID code that is already in the memory is input, the same ID code can be entered. The code is counted as an additional code.

## Keyfob Battery Replacement

EIS003RG

**NOTE:**

- Be careful not to touch the circuit board or battery terminal.
- The keyfob is water-resistant. However, if it does get wet, immediately wipe it dry.

1. Open the lid using a coin.
2. Remove the battery.
3. Install the new battery, positive side down.
4. Close the lid securely. Push the keyfob buttons two or three times to check operation.

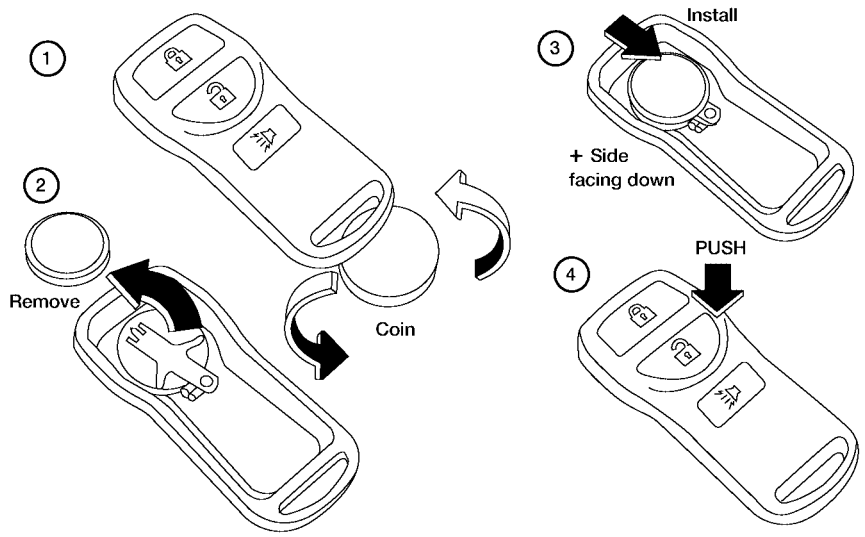


LIIA1514E

# DOOR

PFP:80100

## Fitting Adjustment

EIS003RH

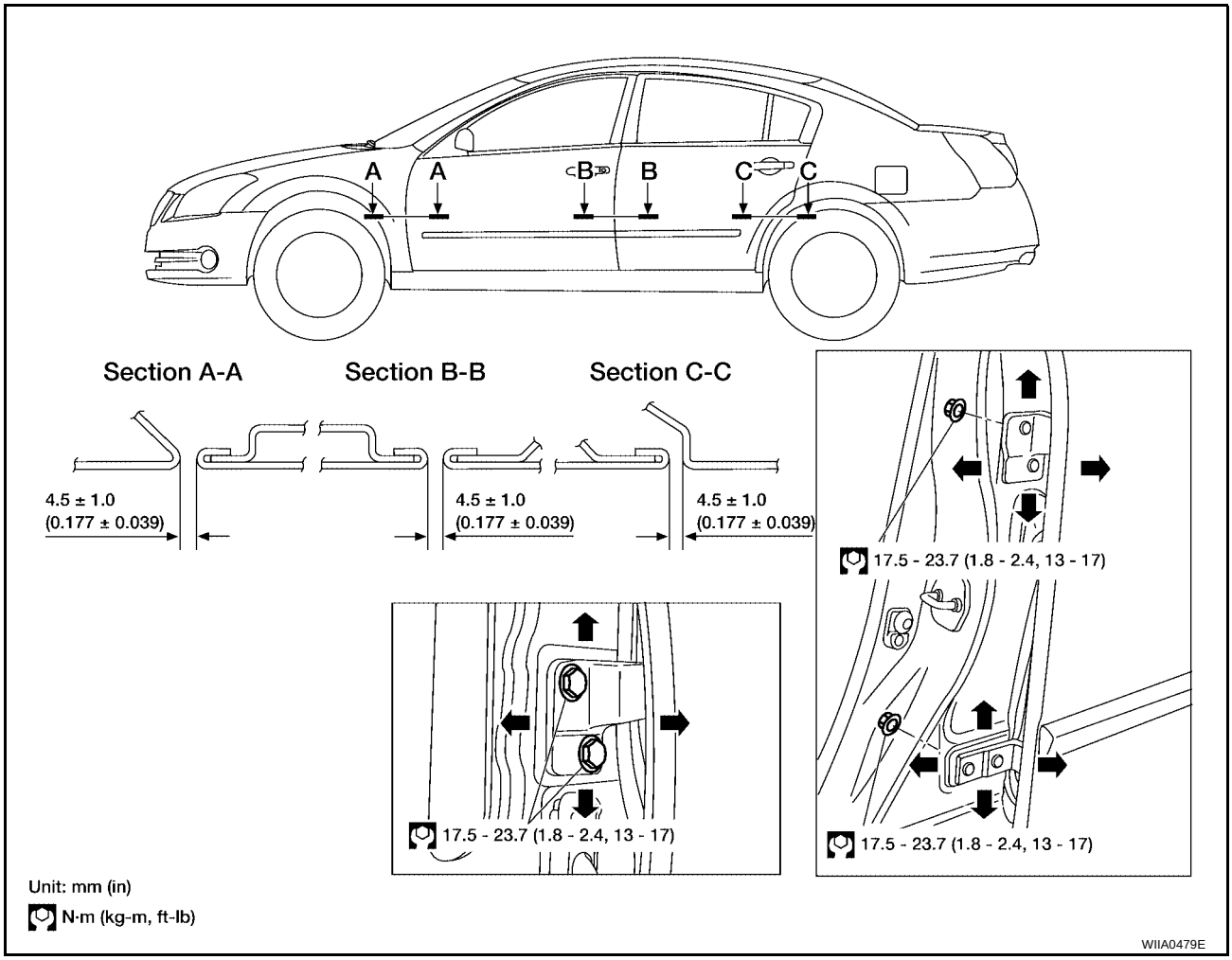


### FRONT DOOR

#### Longitudinal clearance and surface height adjustment at front end

1. Remove the front fender. Refer to EI-20, "FRONT FENDER" .
2. Loosen the hinge bolts. Raise the front door at rear end to adjust.
3. Install the front fender. Refer to EI-20, "FRONT FENDER" .

### REAR DOOR

#### Longitudinal clearance and surface height adjustment at front end

1. Remove the center pillar upper garnish. Refer to EI-33, "Removal and Installation" .
2. Accessing from inside the vehicle, loosen the nuts. Open the rear door, and raise the rear door at rear end to adjust.
3. Install the center pillar upper garnish. Refer to EI-33, "Removal and Installation" .

### STRIKER ADJUSTMENT

1. Adjust the striker so that it becomes parallel with the lock insertion direction.

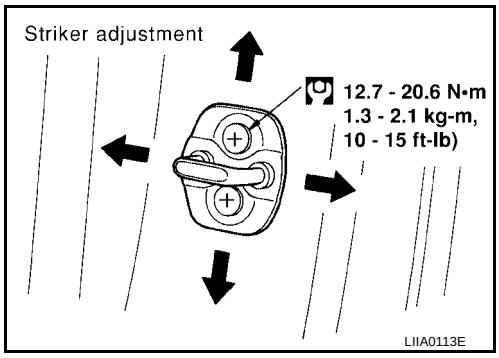


## Removal and Installation

EIS003RI

**CAUTION:**

- **When removing and installing the door assembly, support the door with a jack and shop cloth to protect the door and body.**
- **When removing and installing door assembly, be sure to carry out the fitting adjustment.**
- **Check the hinge rotating part for poor lubrication. If necessary, apply "body grease".**

1. Remove the door window and module assembly. Refer to GW-86, "Door Module Assembly" .
2. Remove the door harness.
3. Remove the check link cover.
4. Remove the check link hinge pillar bolt.

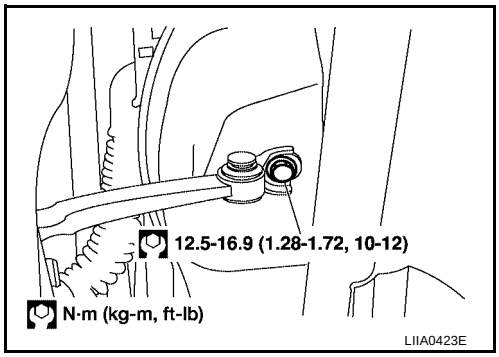


5. Remove the door-side hinge nuts and bolts, and remove the door assembly.

Installation is in the reverse order of removal.

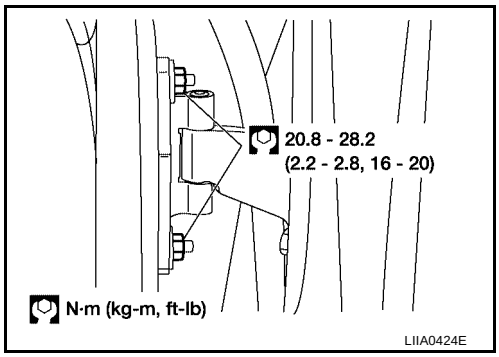

## Door Weatherstrip

EIS003RJ

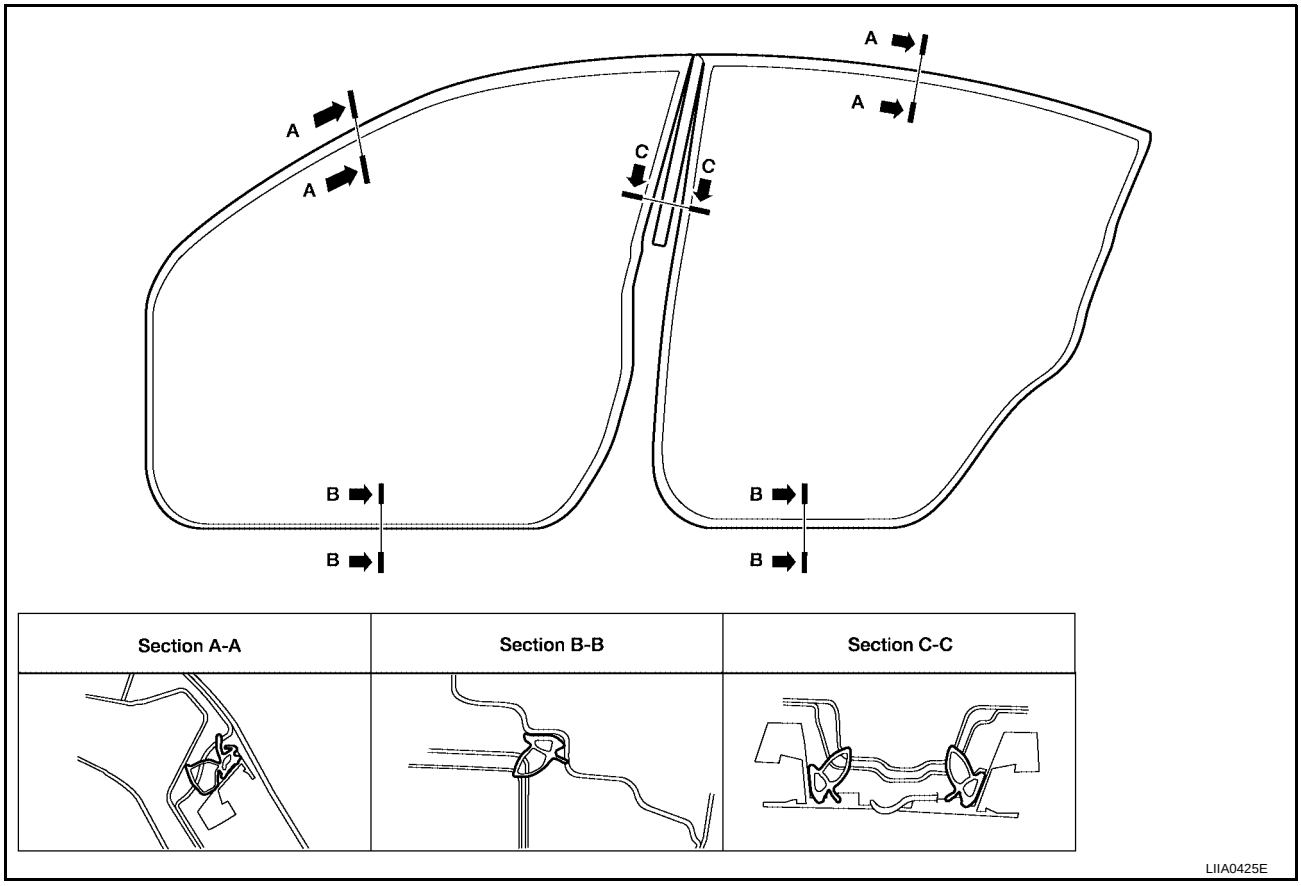

# FRONT DOOR LOCK

PFP:80502

## Component Structure

EIS003RK

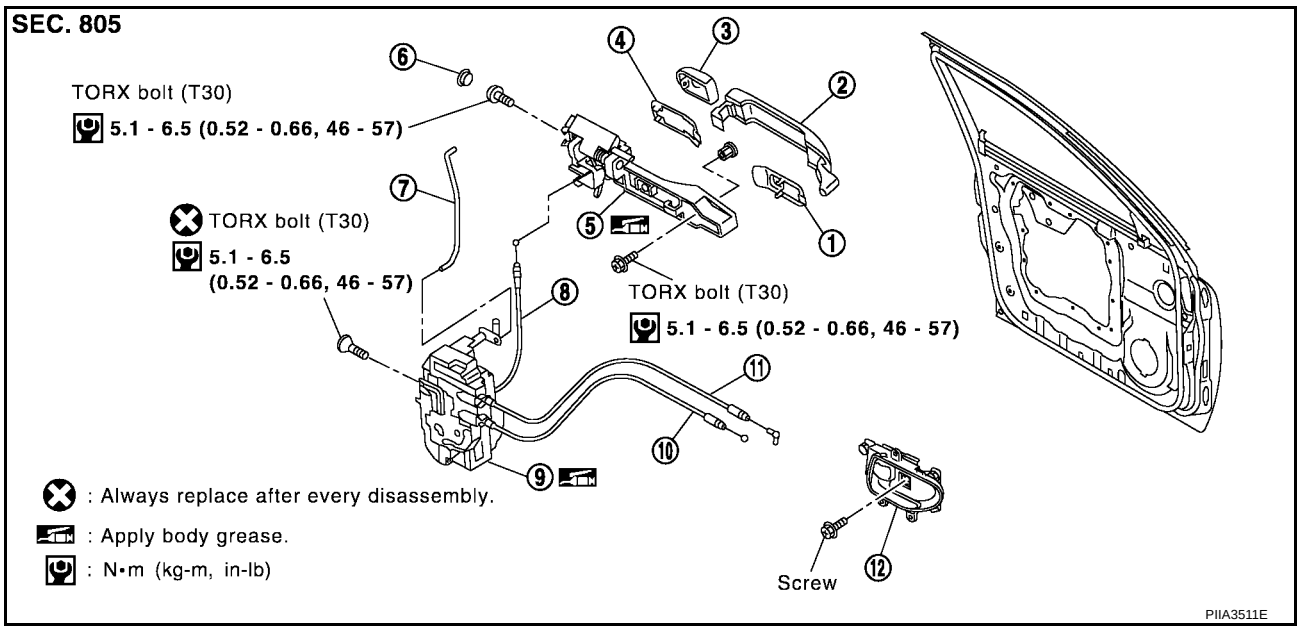


| | | | | | |
|---|---|---|---|---|---|
| 1. | Front gasket | 2. | Outside handle | 3. | Door key cylinder assembly (Driver side)<br>Outside handle escutcheon (Passenger side) |
| 4. | Rear gasket | 5. | Outside handle bracket | 6. | Grommet |
| 7. | Key cylinder rod (Driver side only) | 8. | Outside handle cable | 9. | Door lock assembly |
| 10. | Inside handle cable | 11. | Lock knob cable | 12. | Inside handle |

## Removal and Installation

EIS003RL

### REMOVAL

1. Remove the front door window and front door module assembly. Refer to GW-86, "Door Module Assembly" .
2. Remove door side grommet, and remove door key cylinder assembly (driver side) and outside handle escutcheon (passenger side) bolts (TORX T30) from grommet hole.

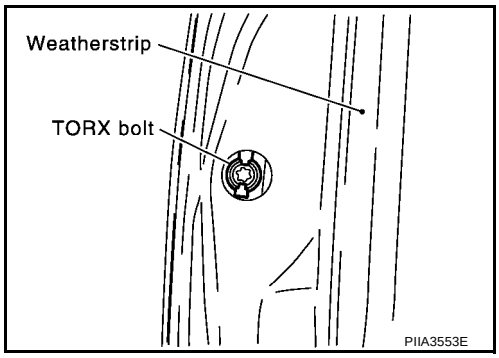


3. Disconnect the key cylinder rod, if equipped.
4. While pulling the outside handle, remove door key cylinder assembly.

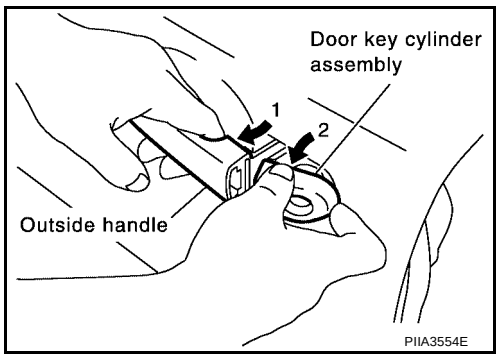

5. While pulling outside handle, slide toward rear of vehicle to remove outside handle.

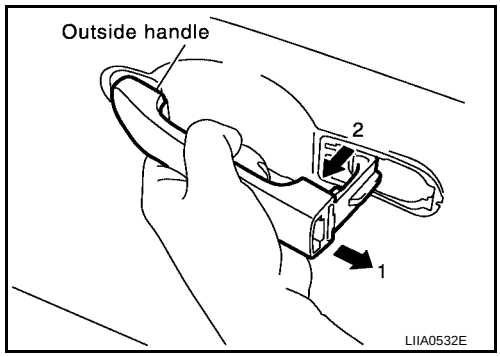


6. Remove the front gasket and rear gasket.

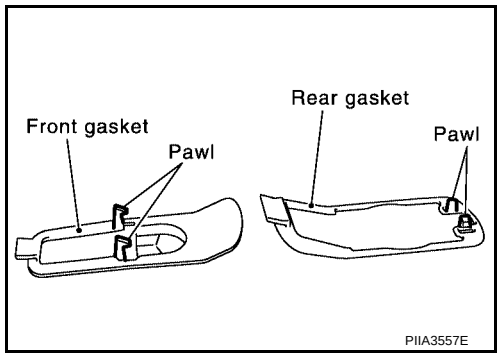


7. Remove the TORX bolts (T30), remove the door lock assembly.

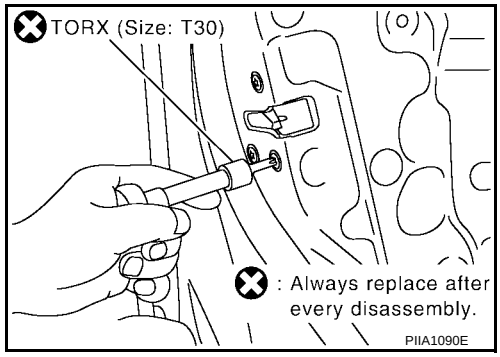


8. Remove the TORX bolt (T30) of the outside handle bracket.

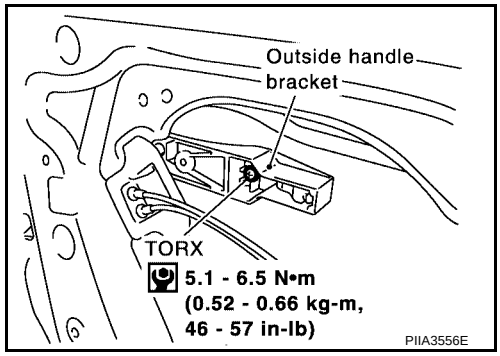


9. While pulling outside handle bracket, slide toward rear of vehicle to remove outside handle bracket and door lock assembly.

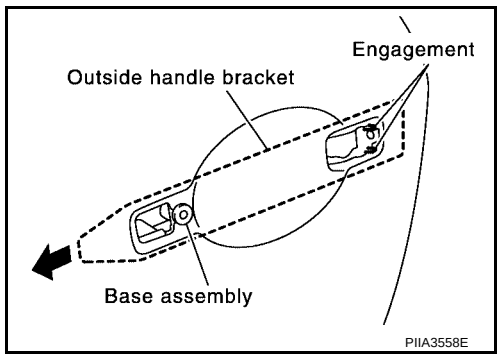

10. Disconnect the door lock actuator connector.
11. Disconnect the outside handle cable from the outside handle bracket.

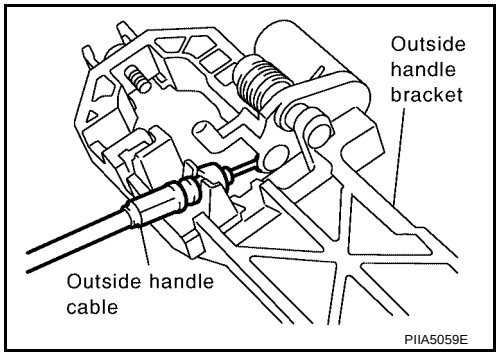


### INSTALLATION

Installation is in the reverse order of removal.

**CAUTION:**

**To install each rod, be sure to rotate the rod holder until a click is felt.**

## Disassembly and Assembly

*EIS003RM*

### DOOR KEY CYLINDER ASSEMBLY

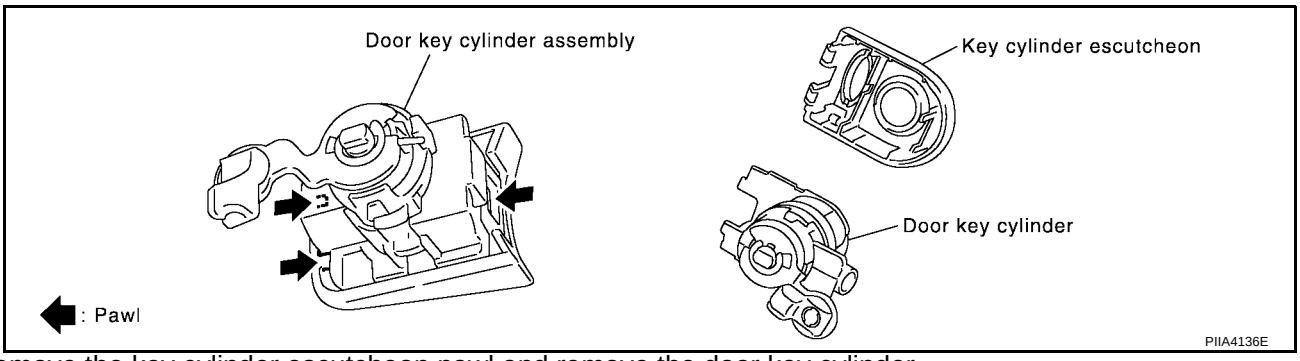


Remove the key cylinder escutcheon pawl and remove the door key cylinder.

# REAR DOOR LOCK

PFP:82502

## Component Structure

EIS003RN

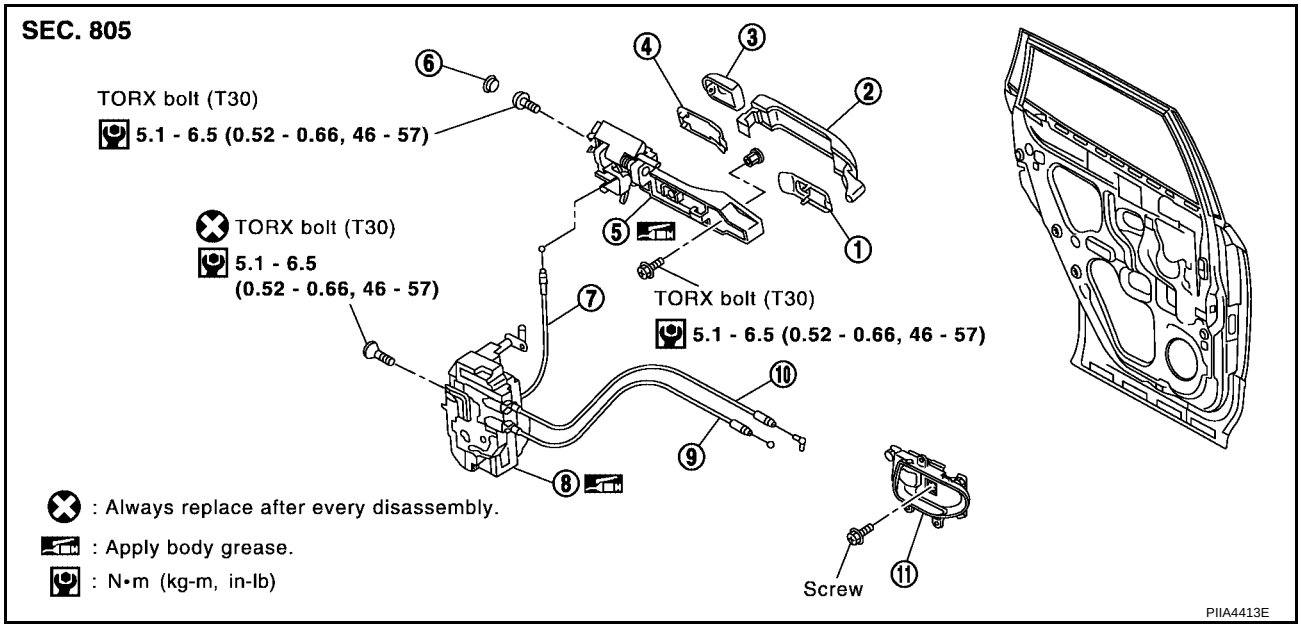


| | | |
|---|---|---|
| 1. Front gasket | 2. Outside handle | 3. Outside handle escutcheon |
| 4. Rear gasket | 5. Outside handle bracket | 6. Grommet |
| 7. Outside handle cable | 8. Door lock assembly | 9. Inside handle cable |
| 10. Lock knob cable | 11. Inside handle | |

## Removal and Installation

EIS003RO

### REMOVAL

1. Remove the rear door window and rear door module assembly. Refer to GW-88, "Rear Door Glass" .
2. Remove door side grommet, and remove outside handle escutcheon bolt (TORX T30) from grommet hole.

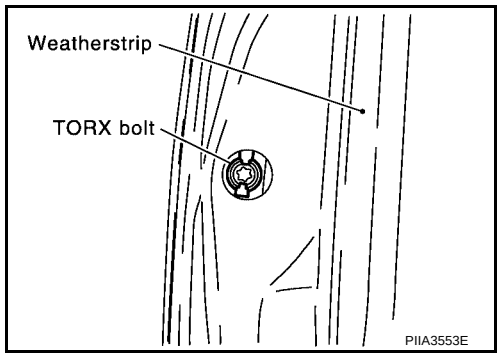


3. While pulling the outside handle, remove outside handle escutcheon.

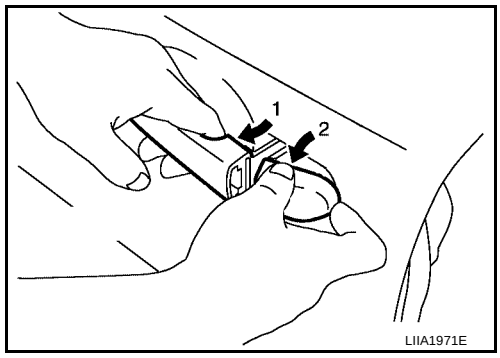

4. While pulling outside handle, slide toward rear of vehicle to remove outside handle.

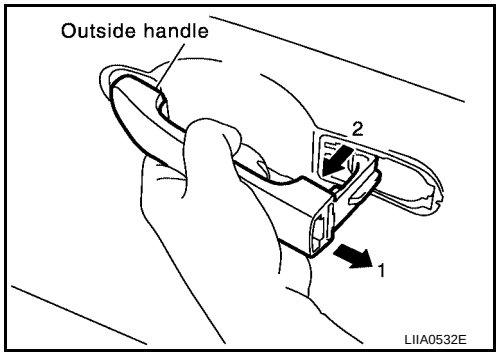


5. Remove the front gasket and rear gasket.

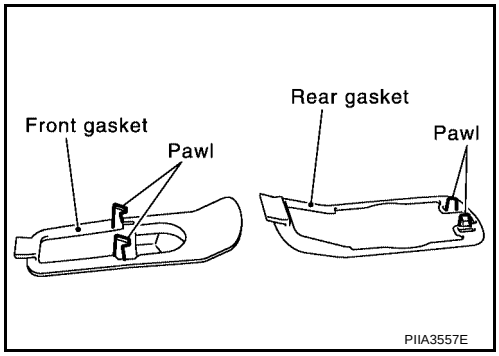


6. Remove the TORX bolts (T30), remove the door lock assembly.

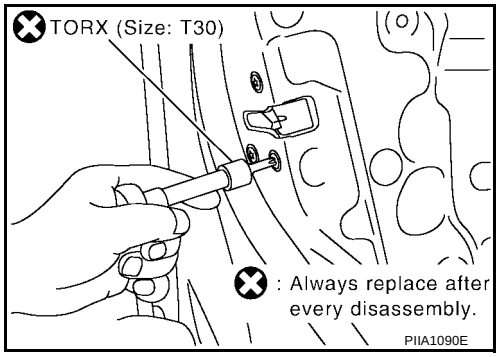


7. Remove the TORX bolt (T30), and remove the outside handle bracket.

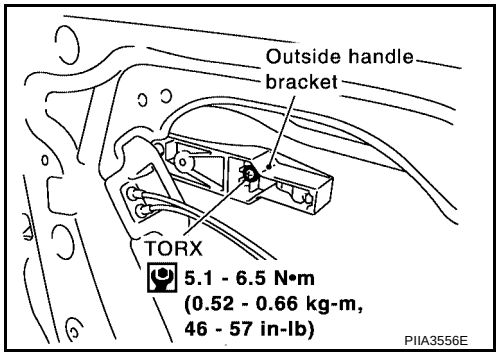


8. While pulling outside handle, slide toward rear of vehicle to remove outside handle and door lock assembly.

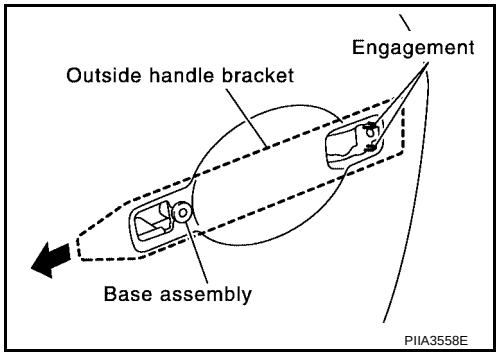

9. Disconnect the door lock actuator connector.
10. Disconnect the outside handle cable from the outside handle bracket.

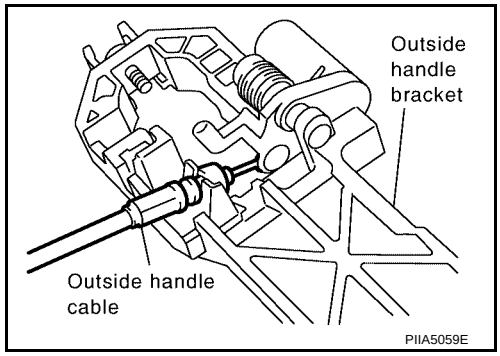


## INSTALLATION

Installation is in the reverse order of removal.

# TRUNK LID AND FUEL FILLER LID OPENER

PFP:84640

## Wiring Diagram — TLID —

EIS003RP

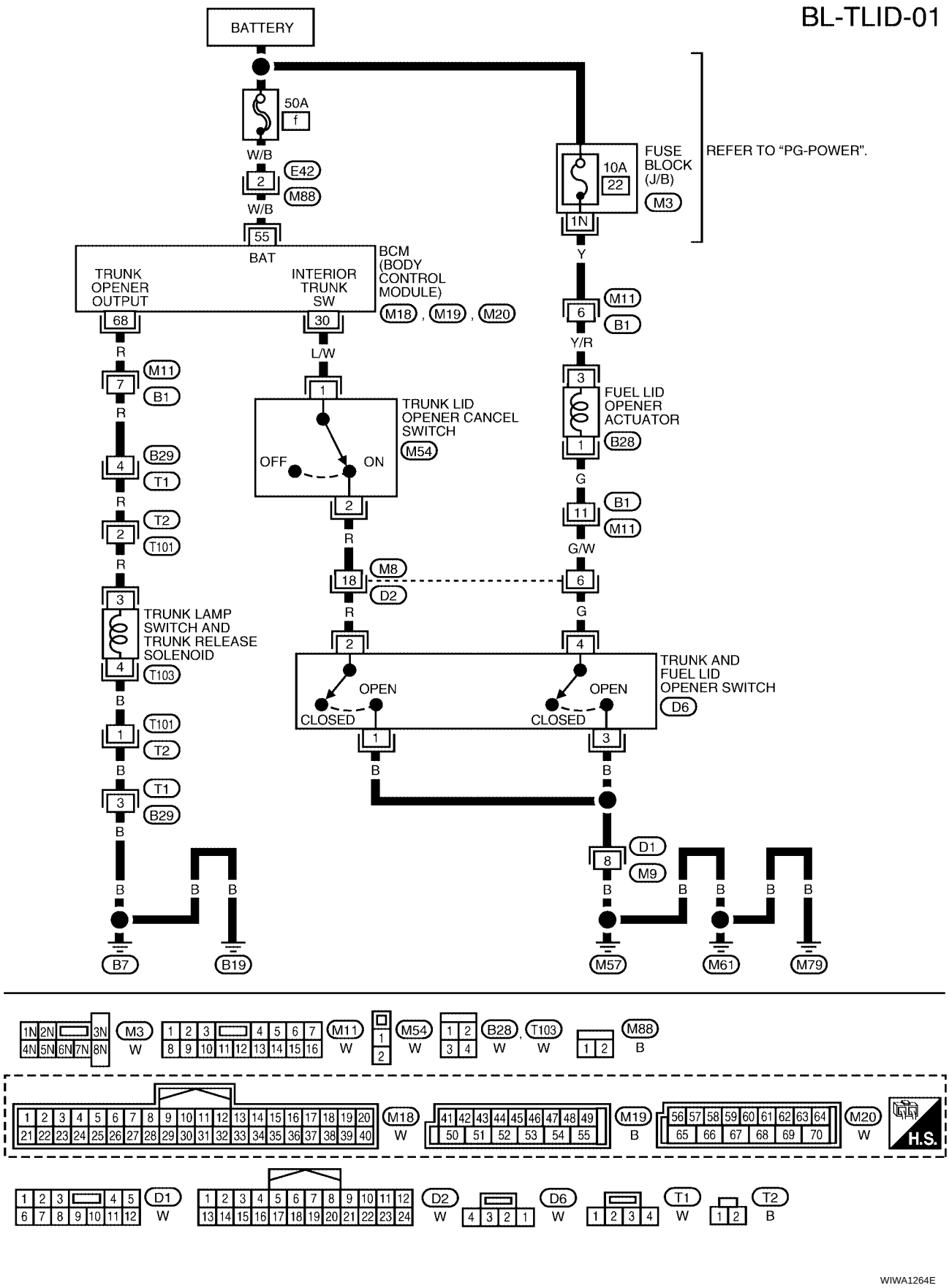

## Terminals and Reference Value for BCM

EIS003RQ

| Terminal | Wire Color | Item | Condition | Voltage (V) (Approx.) |
|---|---|---|---|---|
| 30 | L/W | Trunk lid opener switch | OFF → ON | Battery voltage → 0 |
| 55 | W/B | Battery power supply | — | Battery voltage |
| 68 | R | Trunk lid opener release solenoid | When trunk lid opener release solenoid is operated using key fob (ON → OFF) | 0 → Battery voltage |

## Fitting Adjustment

EIS003RR

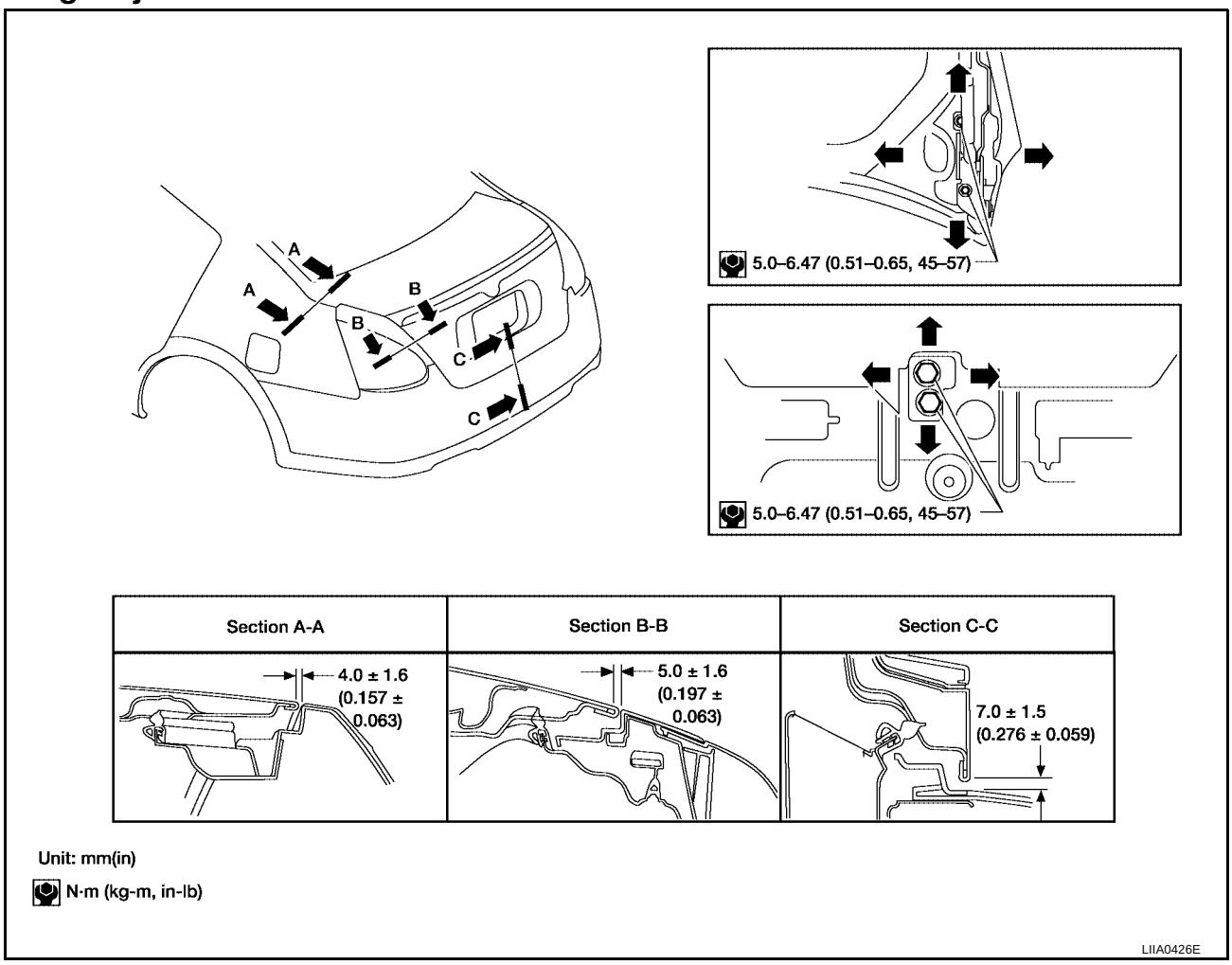


### LONGITUDINAL AND LATERAL CLEARANCE ADJUSTMENT

1. With the striker released, loosen the trunk lid hinge bolts and close the trunk lid.
2. Make the lateral clearance and the clearance to the rear window glass equal, and open the trunk lid to tighten the bolts to the specified torque.

### SURFACE HEIGHT ADJUSTMENT

1. Loosen the striker bolts. Raise the striker to the top position, and temporarily tighten the upper bolt.
2. Close the trunk lid lightly and adjust the surface height, then open the trunk lid and tighten the striker bolts to the specified torque.

## Removal and Installation of Trunk Lid Assembly

EIS003RS

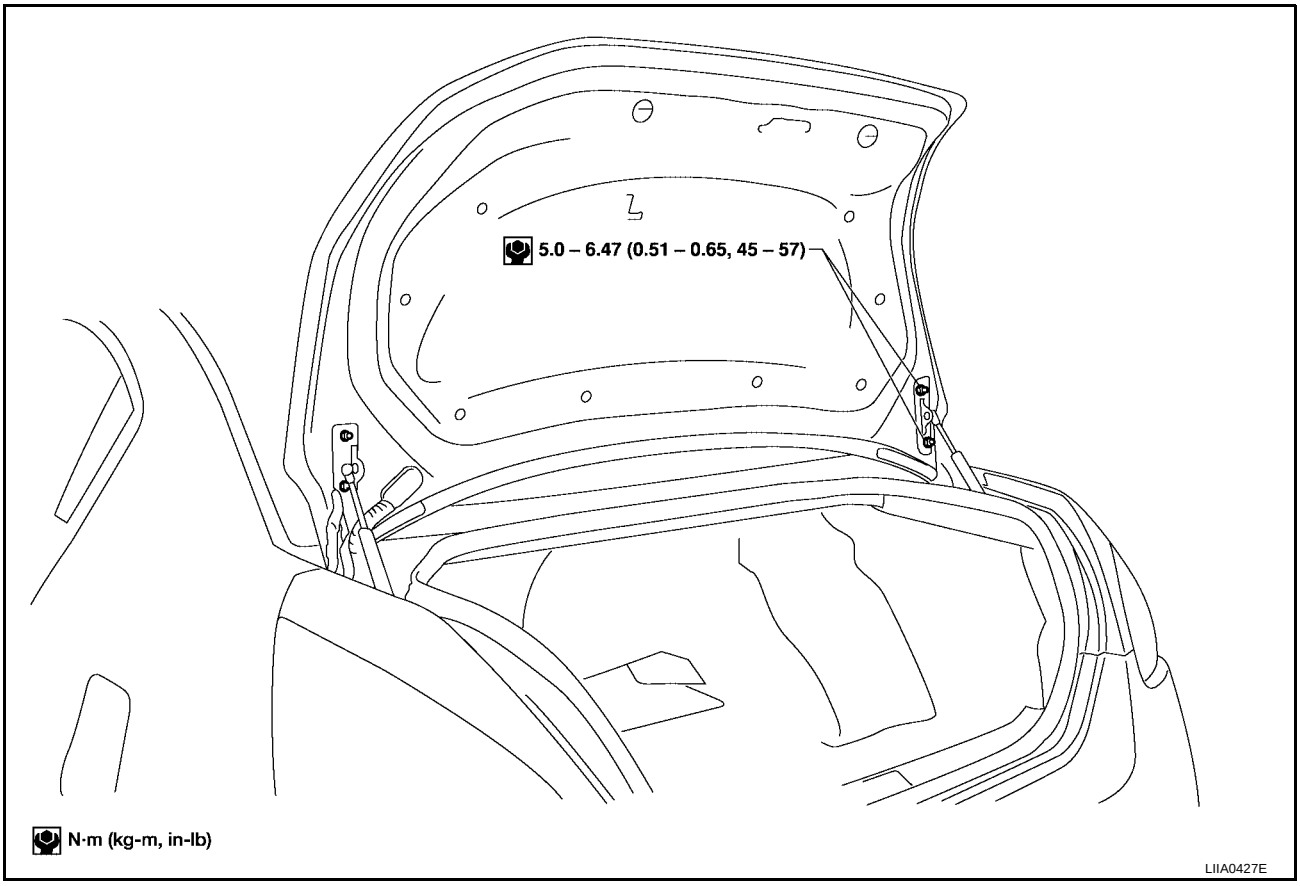


1. Remove the trunk lid finisher. Refer to EI-43, "TRUNK ROOM TRIM & TRUNK LID FINISHER" .
2. Remove the trunk lid wire harness.
3. Remove the bolts and the trunk lid assembly.

   **CAUTION:**
   **After installing, apply touch-up paint (body color) to the head of the hinge bolts.**

Installation is in the reverse order of removal.

## Removal and Installation of Trunk Lid Lock

EIS003RT

### LOCK REMOVAL

1. Remove the trunk lid finisher. Refer to EI-43, "TRUNK ROOM TRIM & TRUNK LID FINISHER" .
2. Disconnect the release cable.
3. After disconnecting the harness connector, remove the bolts and the trunk lid lock.

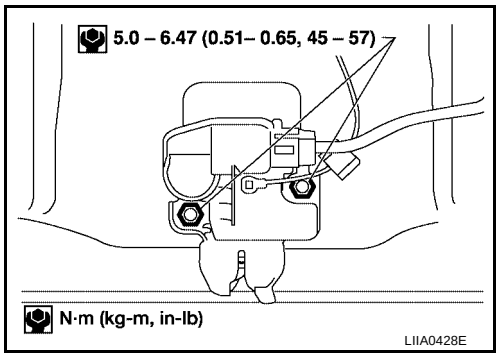

### STRIKER REMOVAL

1. Remove the trunk rear plate and trunk rear finisher. Refer to EI-43, "TRUNK ROOM TRIM & TRUNK LID FINISHER" .
2. After removing the cable connection, remove the bolts, disconnect the release cable, and remove the striker from the trunk lock support.

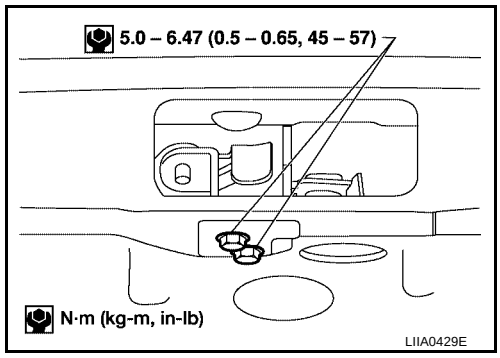


### LOCK AND STRIKER INSTALLATION

Installation is in the reverse order of removal.

- After installing, close the trunk lid lightly. Perform the lock and surface height adjustment. Refer to BL-77, "Fitting Adjustment" .
- After installing, check the operation.

## Removal and Installation of Trunk Lid Weatherstrip

EIS003RU

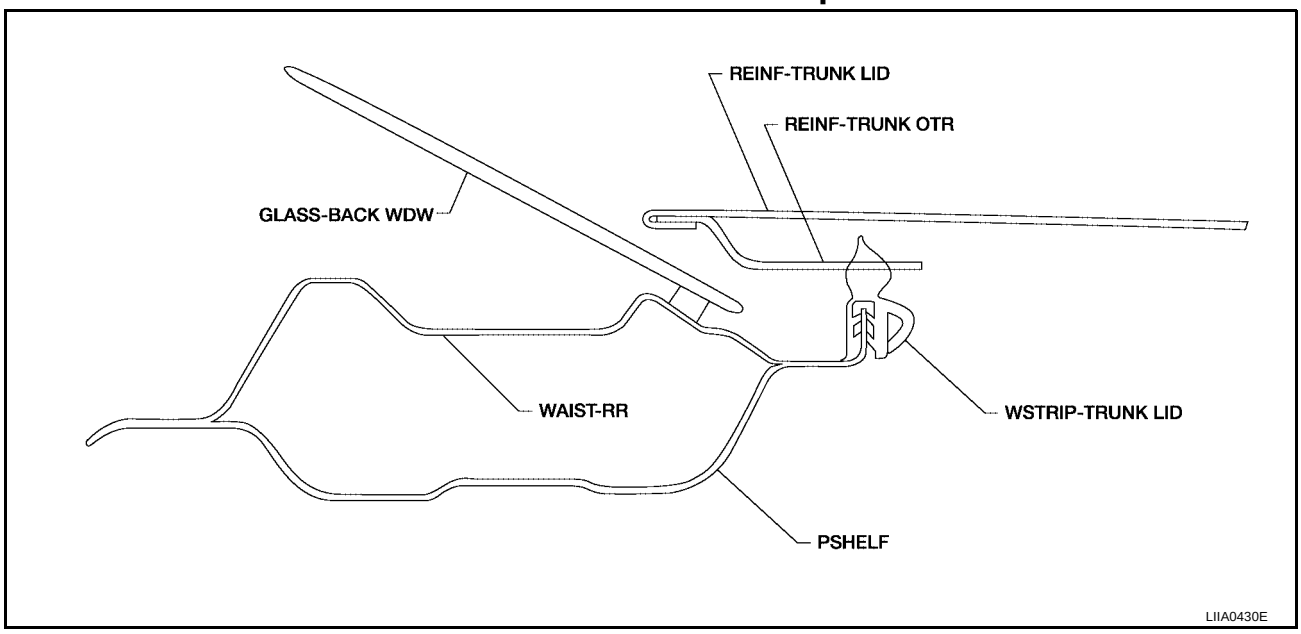


1. At rear side, align the weatherstrip seam to the center of the striker.
2. After installing, pull the weatherstrip lightly to check for looseness.

   **CAUTION:**
   **The weatherstrip should fit tightly onto the corners and trunk lid rear plate.**

## Fuel Filler Lid Opener

EIS007N4

### REMOVAL

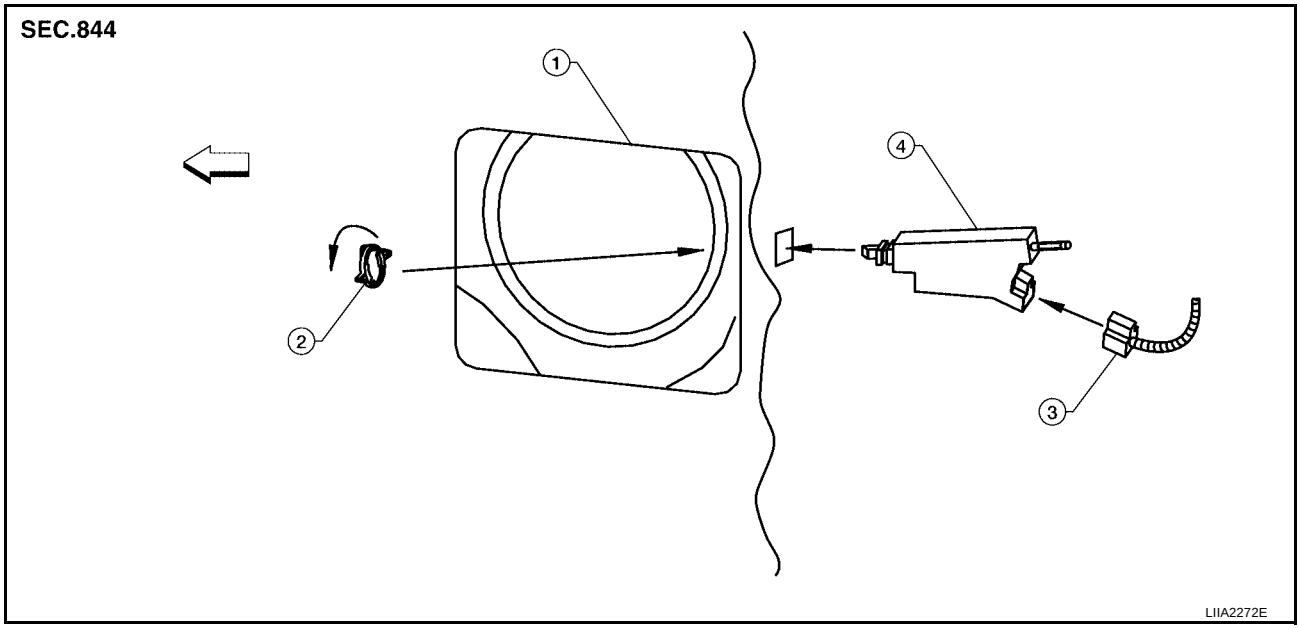


1. Fuel filler lid opening (LH rear fender)
2. Lock ring
3. Electrical connector
4. Fuel filler lid opener actuator

1. Remove LH trunk side finisher. Refer to EI-43, "TRUNK ROOM TRIM & TRUNK LID FINISHER" .
2. Open fuel filler lid.
3. Disconnect fuel filler lid opener actuator electrical connector.
4. Remove lock ring and fuel filler lid opener actuator.
   - Turn lock ring 1/4 turn counter-clockwise to remove.

### INSTALLATION

Installation is in the reverse order of removal.

# VEHICLE SECURITY (THEFT WARNING) SYSTEM

PFP:28491

## Component Parts and Harness Connector Location

EIS003RV

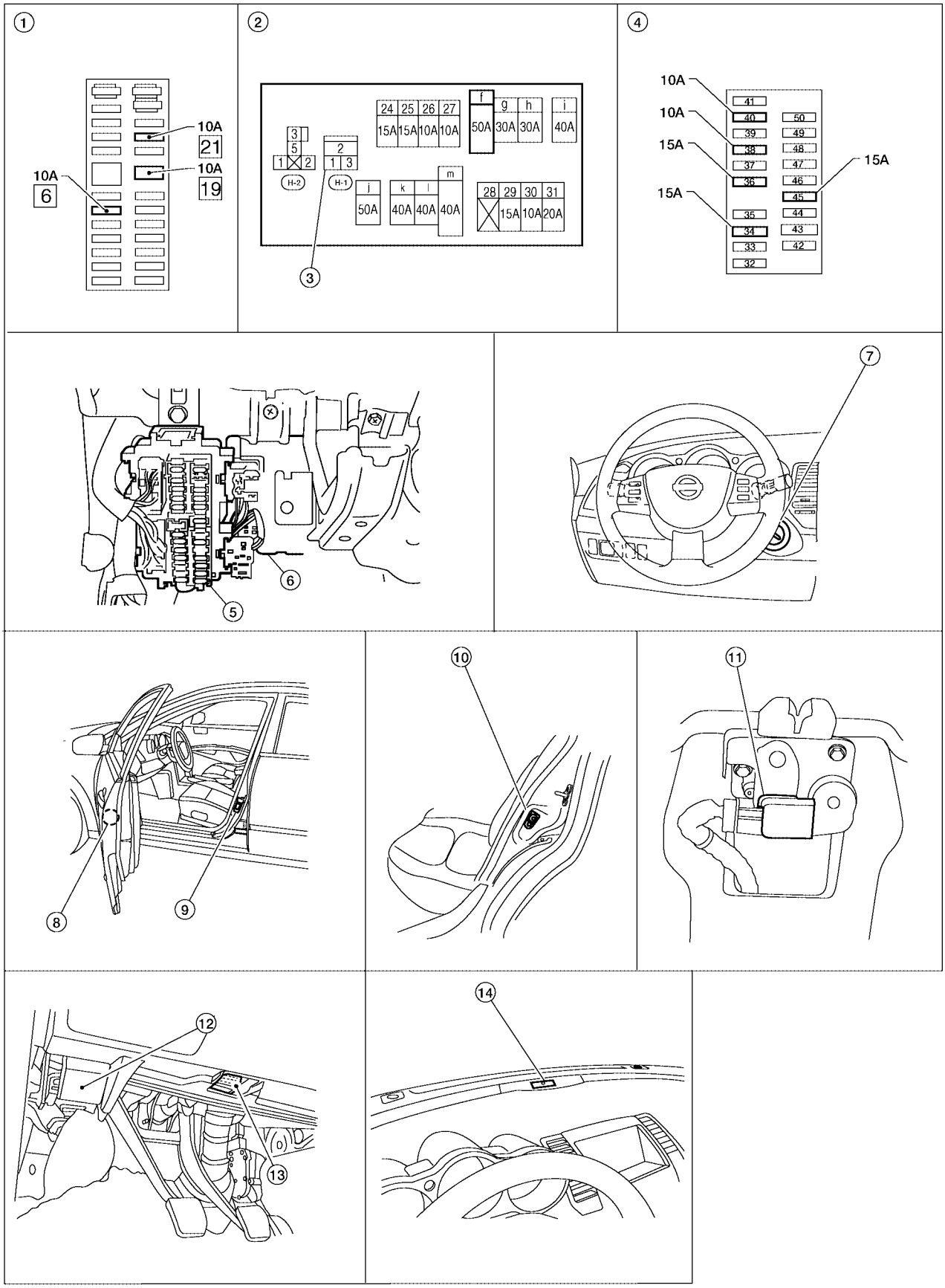


LIIA2352E

1. Fuse block (J/B)
2. Fuse and fusible link box
3. Horn relay
4. Fuse block (J/B) (view with instrument panel removed)
5. Fuse block (J/B) (view with instrument panel removed)
6. BCM M18, M19, M20 (view with instrument panel removed)
7. Key switch and key lock solenoid M27
8. Front door lock assembly LH (key cylinder switch) D51
9. Front door switch LH B8 Front door switch RH B108
10. Rear door switch LH B18 Rear door switch RH B116
11. Trunk lamp switch and trunk release solenoid T103
12. Hood opener handle
13. Data link connector M22
14. Security indicator lamp M201

# System Description

EIS003RW

## DESCRIPTION

### Operation Flow

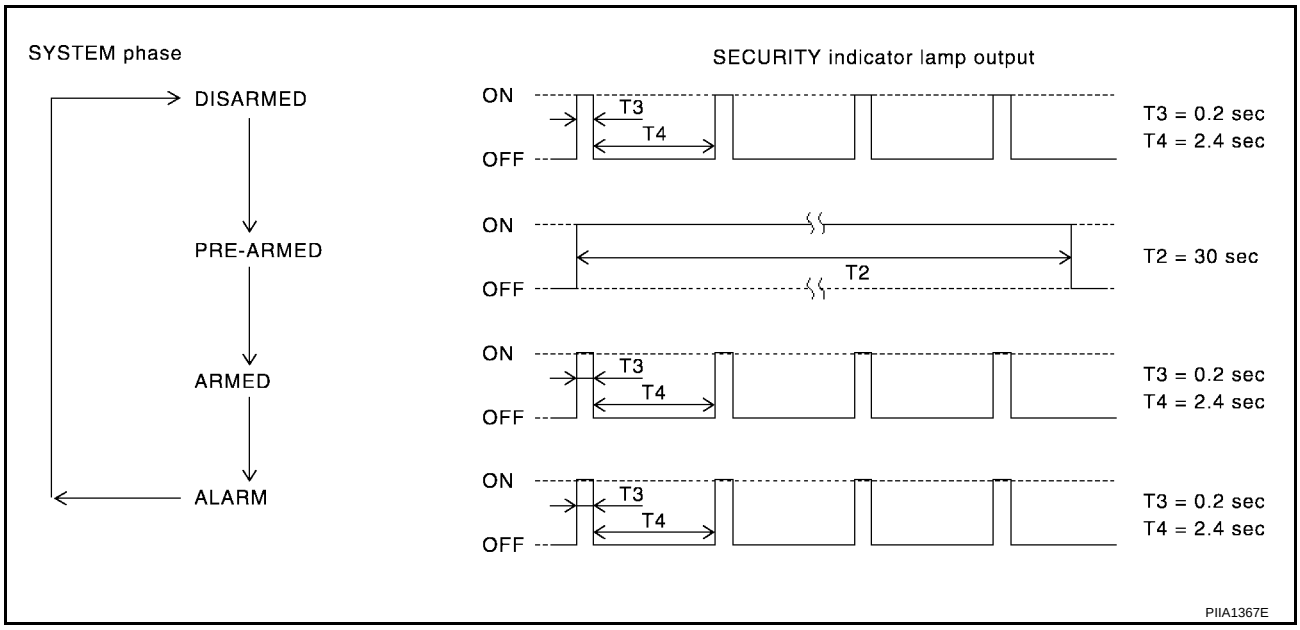


### Setting the vehicle security system

#### Initial condition

- Ignition switch is in OFF position.

#### Disarmed phase

- When the vehicle is being driven or when doors or trunk lid is open, the vehicle security system is set in the disarmed phase on the assumption that the owner is inside or near the vehicle.

#### Pre-armed phase and armed phase

- The vehicle security system turns into the "pre-armed" phase when hood, trunk lid and all doors are closed and locked by electronic key. The security indicator lamp illuminates for 30 seconds. then, the system automatically shifts into the "armed" phase.

### Canceling the set vehicle security system

When one of the following operations is performed, the armed phase is canceled.

1. Unlock the doors with the key or the keyfob.
2. Open the trunk lid with the key or the keyfob. When the trunk lid is closed after opening the trunk lid with the keyfob, the system returns to the armed phase.

### Activating the alarm operation of the vehicle security system

Make sure the system is in the armed phase.
When one of the following operations is performed, the system sounds the horns and flashes the head-lamps for about 50 seconds.

1. Any door is opened before unlocking door with key or keyfob.
2. Door is unlocked without using key or keyfob.

3. Trunk lid is opened without using key or keyfob.

## POWER SUPPLY

Power is supplied at all times

- through 10A fuse [No.19, located in the fuse block (J/B)]
- to security indicator lamp terminal 1 and
- through 50A fusible link (letter **f** , located in the fuse and fusible link box)
- to BCM terminal 55
- through 10A fuse [No. 21, located in the fuse block (J/B)]
- to BCM terminal 42
- through 15A fuse (No. 25, located in the fuse and fusible link box)
- to horn relay terminal 2
- through 15A fuse (No. 34, located in the IPDM E/R)
- to IPDM E/R internal CPU.

With the ignition switch in the ACC or ON position, power is supplied

- through 10A fuse [No. 6, located in the fuse block (J/B)]
- to BCM terminal 11.

## INITIAL CONDITION TO ACTIVATE THE SYSTEM

The operation of the vehicle security system is controlled by the doors and trunk lid.
To activate the vehicle security system, BCM must receive signals indicating the doors and trunk lid are closed and the doors are locked.
When a door is open, BCM terminal 12, 13, 62 or 63 receives a ground signal from each door switch.
When front door LH is unlocked, BCM terminal 22 receives a signal from terminal 14 of main power window and door lock/unlock switch.
When front door RH or either rear door is unlocked, BCM terminal 22 receives a signal from terminal 16 of power window and door lock/unlock switch RH or the rear power window switch LH or RH.
When the trunk lid is open, BCM terminal 57 receives a ground signal

- from terminal 2 of the trunk lamp and trunk release solenoid switch
- through body grounds B7 and B19.

## VEHICLE SECURITY SYSTEM ALARM OPERATION

The vehicle security system is triggered by

- opening a door
- opening the trunk lid
- unlocking door without using the key or keyfob.

The vehicle security system will be triggered once the system is in armed phase,

- when BCM receives a ground signal at terminals 12, 13, 62, 63 (door switch), or terminal 57 (trunk lamp switch and trunk release solenoid).

Power is supplied at all times

- to horn relay terminal 2
- through 15A fuse (No. 25, located in fuse and fusible link box).

When the vehicle security system is triggered, ground is supplied intermittently

- from IPDM E/R terminal 51
- to horn relay terminal 1.

The headlamps flash and the horn sounds intermittently.
The alarm automatically turns off after 50 seconds, but will reactivate if the vehicle is tampered with again.

## VEHICLE SECURITY SYSTEM DEACTIVATION

To deactivate the vehicle security system, a door or the trunk lid must be unlocked with the key or keyfob.
When the key is used to unlock a door, BCM terminal 22 receives signal

- from terminal 14 of the main power window and door lock/unlock switch.

When the BCM receives either one of these signals or unlock signal from keyfob or front door lock assembly LH (key cylinder switch), the vehicle security system is deactivated. (Disarmed phase)

### PANIC ALARM OPERATION

Remote keyless entry system may or may not operate vehicle security system (horn and headlamps) as required.
When the remote keyless entry system is triggered, ground is supplied intermittently

- from IPDM E/R terminal 51
- to horn relay terminal 1.

The headlamp flashes and the horn sounds intermittently.
The alarm automatically turns off after 25 seconds or when BCM receives any signal from keyfob.

## CAN Communication System Description

EIS003RX

Refer to LAN-25, "CAN COMMUNICATION" .

## Schematic

EIS003RY

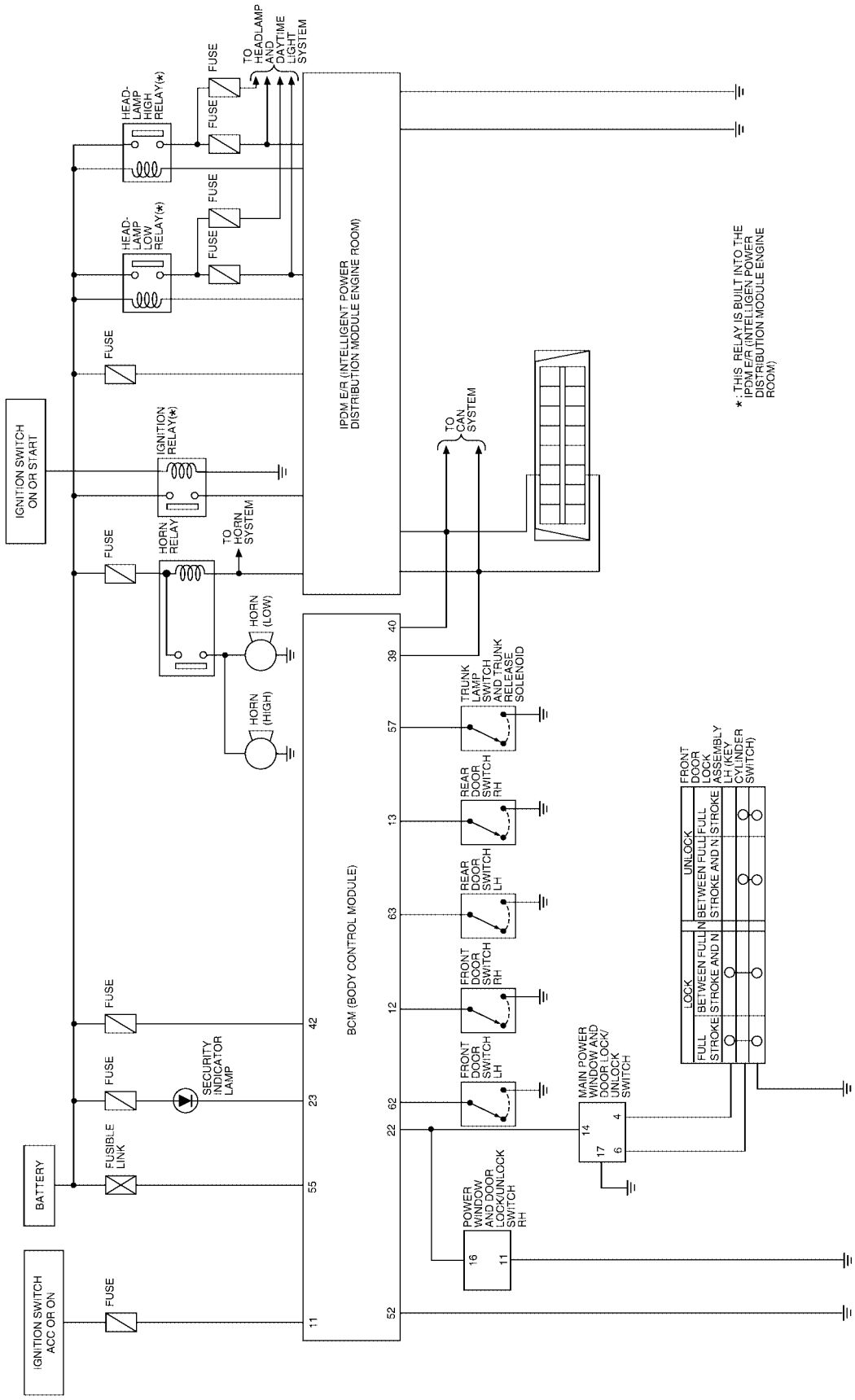


WIWA1265E

## Wiring Diagram —VEHSEC—

EIS003RZ

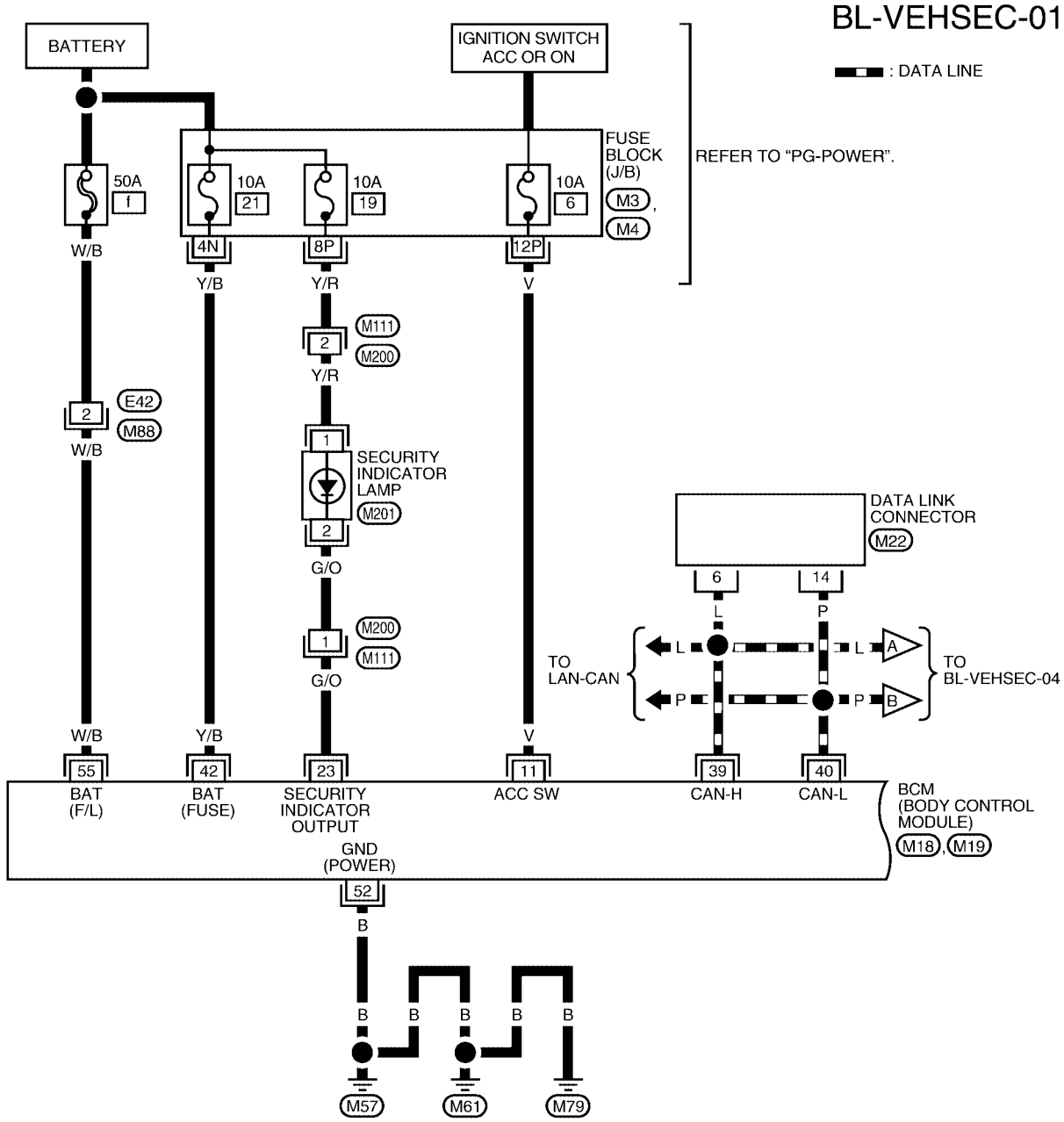


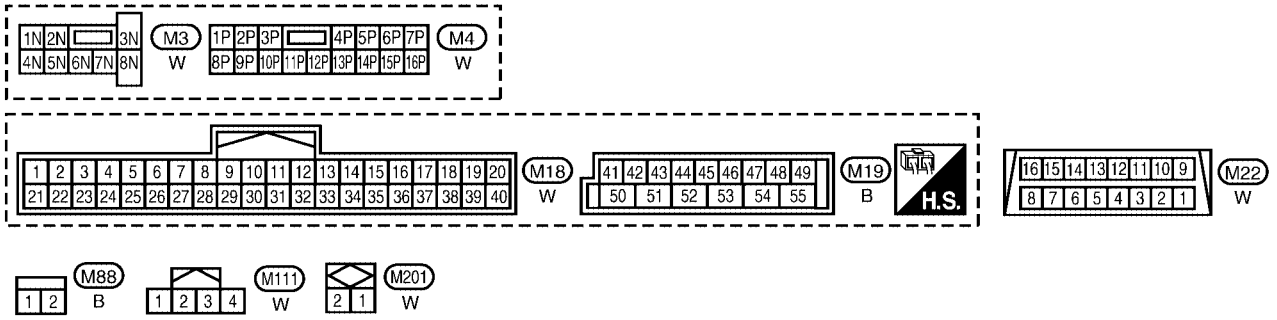


WIWA1266E

BL-VEHSEC-02

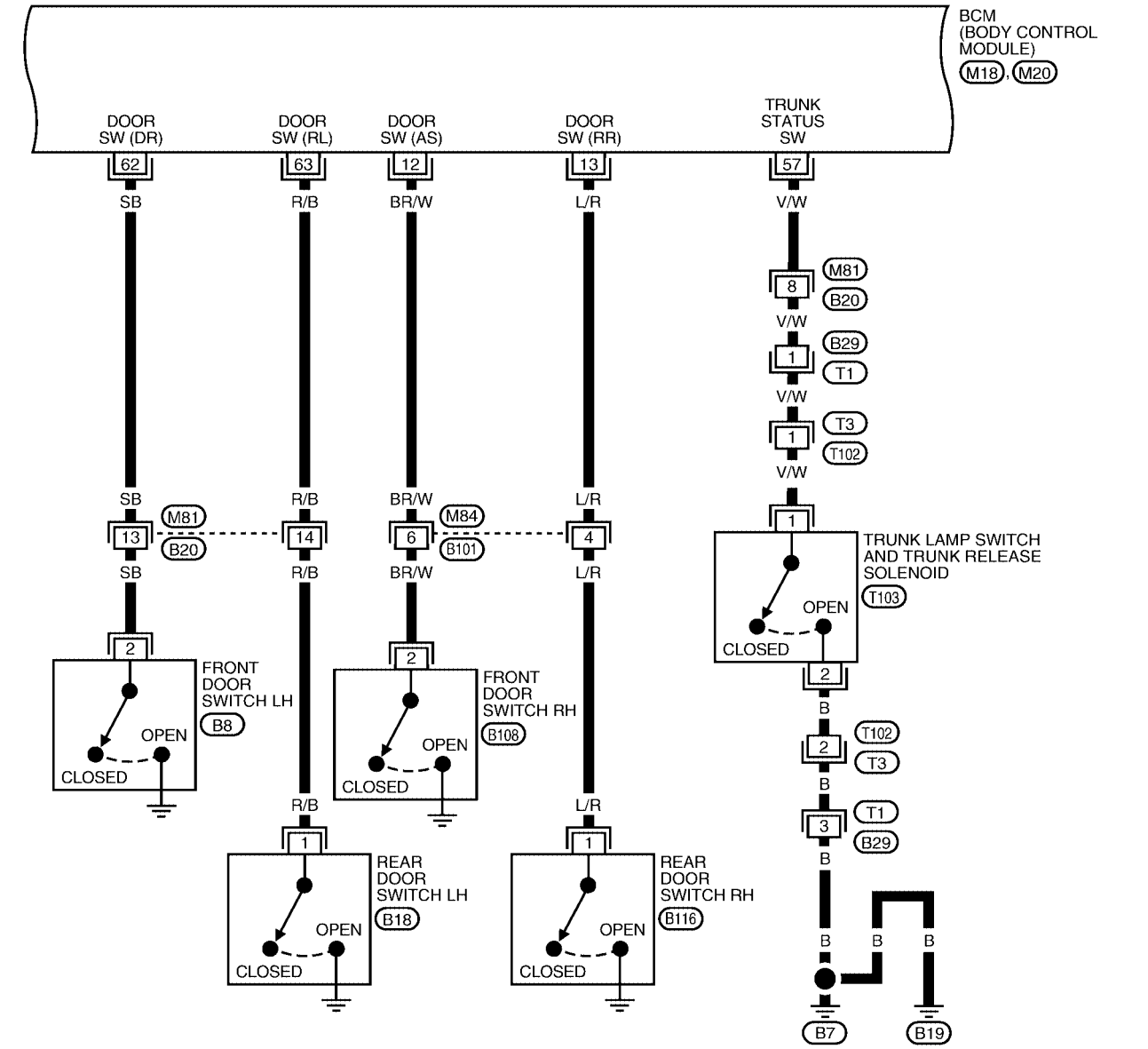


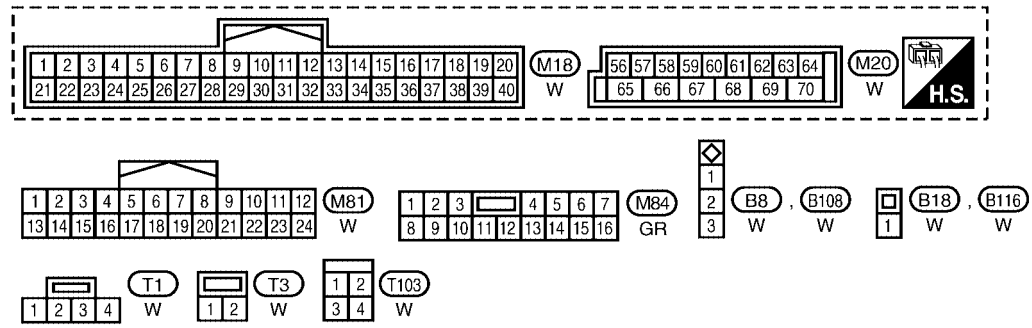


WIWA1267E

BL-VEHSEC-03

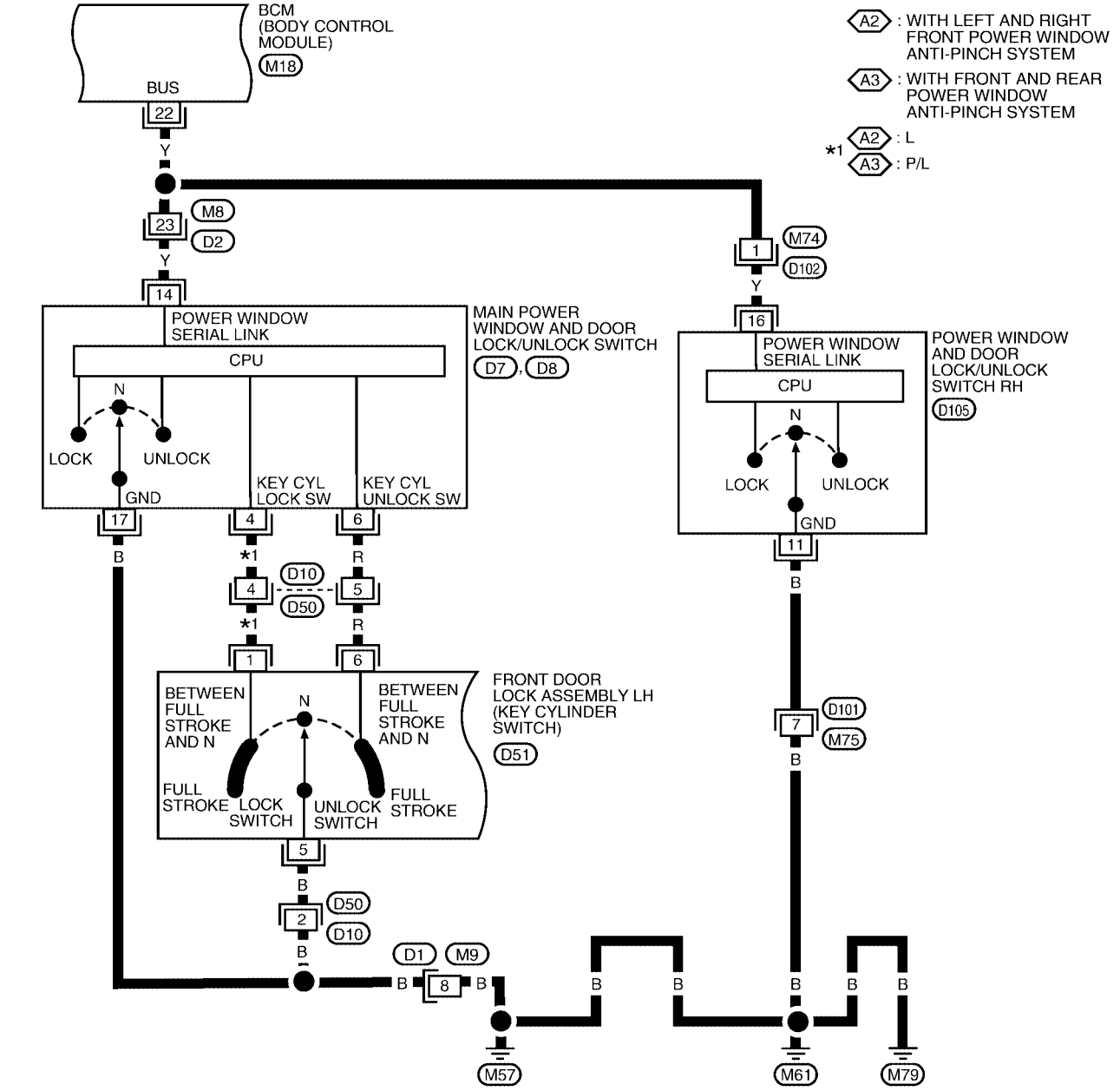


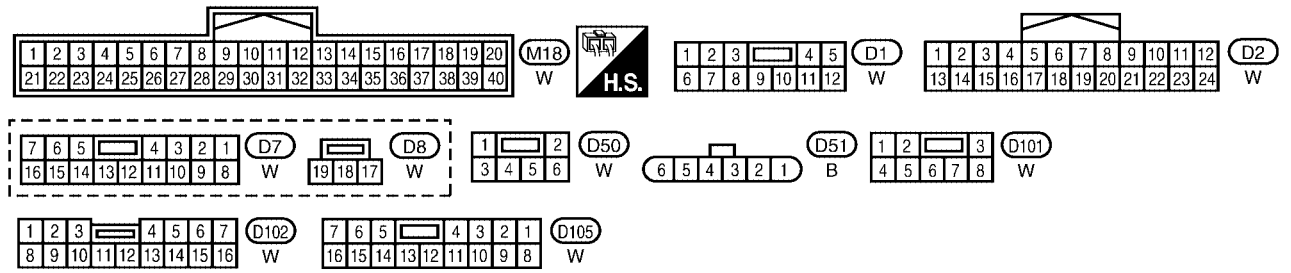


WIWA1268E

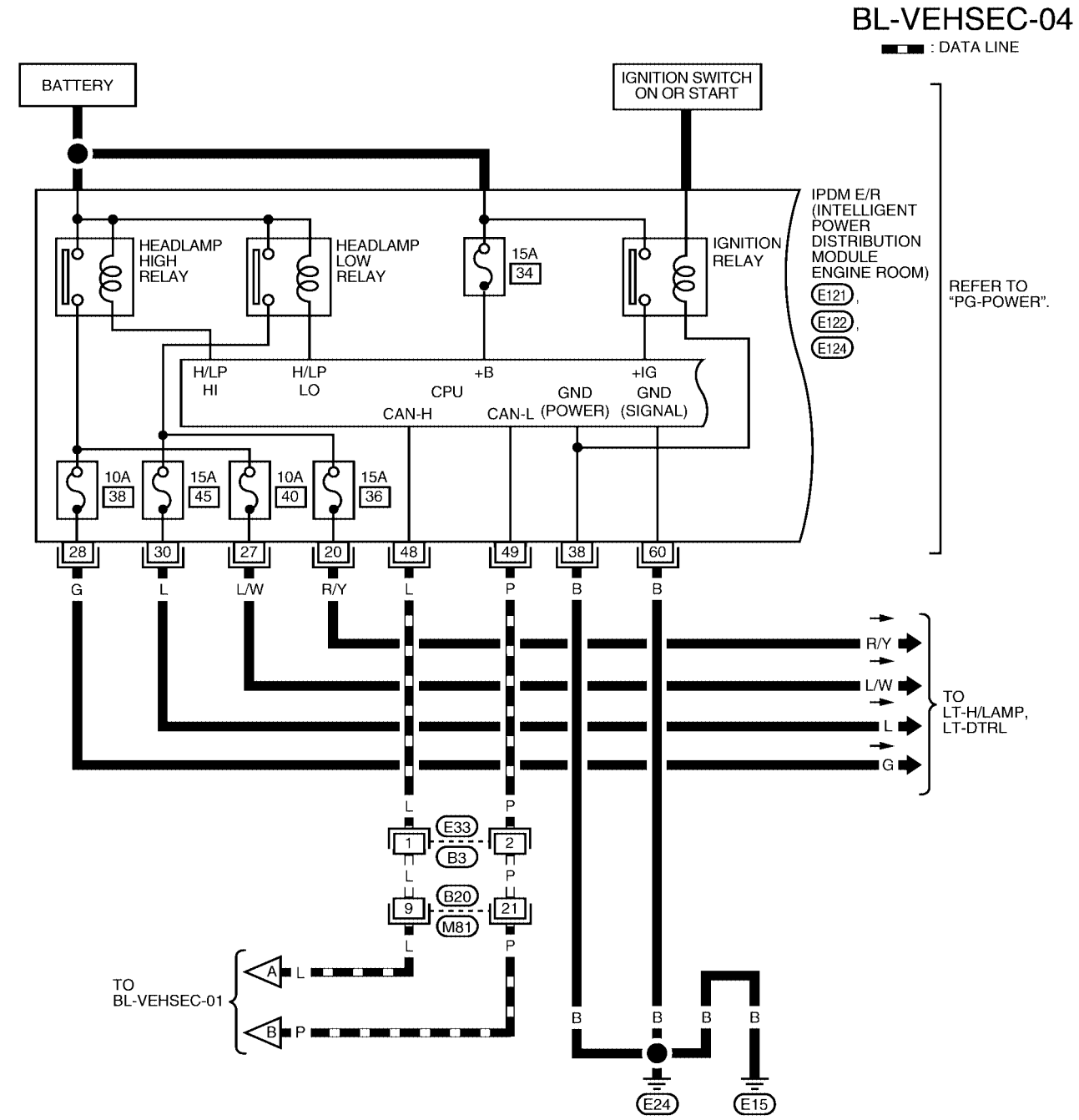
BL-VEHSEC-04
: DATA LINE
BATTERY
IGNITION SWITCH ON OR START
IPDM E/R (INTELLIGENT POWER DISTRIBUTION MODULE ENGINE ROOM)
E121, E122, E124
REFER TO "PG-POWER".
HEADLAMP HIGH RELAY
HEADLAMP LOW RELAY
15A 34
IGNITION RELAY
H/LP HI
H/LP LO
+B
+IG
CPU
CAN-H
CAN-L
GND (POWER)
GND (SIGNAL)
10A 38
15A 45
10A 40
15A 36
28 30 27 20 48 49 38 60
G L L/W R/Y L P B B
R/Y
L/W
L
G
TO LT-H/LAMP, LT-DTRL
E33
B3
B20
M81
TO BL-VEHSEC-01
A
B
E24
E15

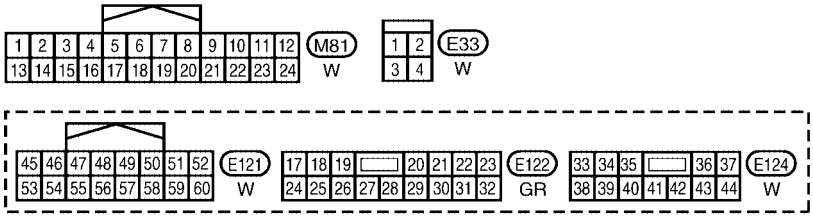
M81 W
E33 W
E121 W
E122 GR
E124 W

WIWA1269E

BL-VEHSEC-05

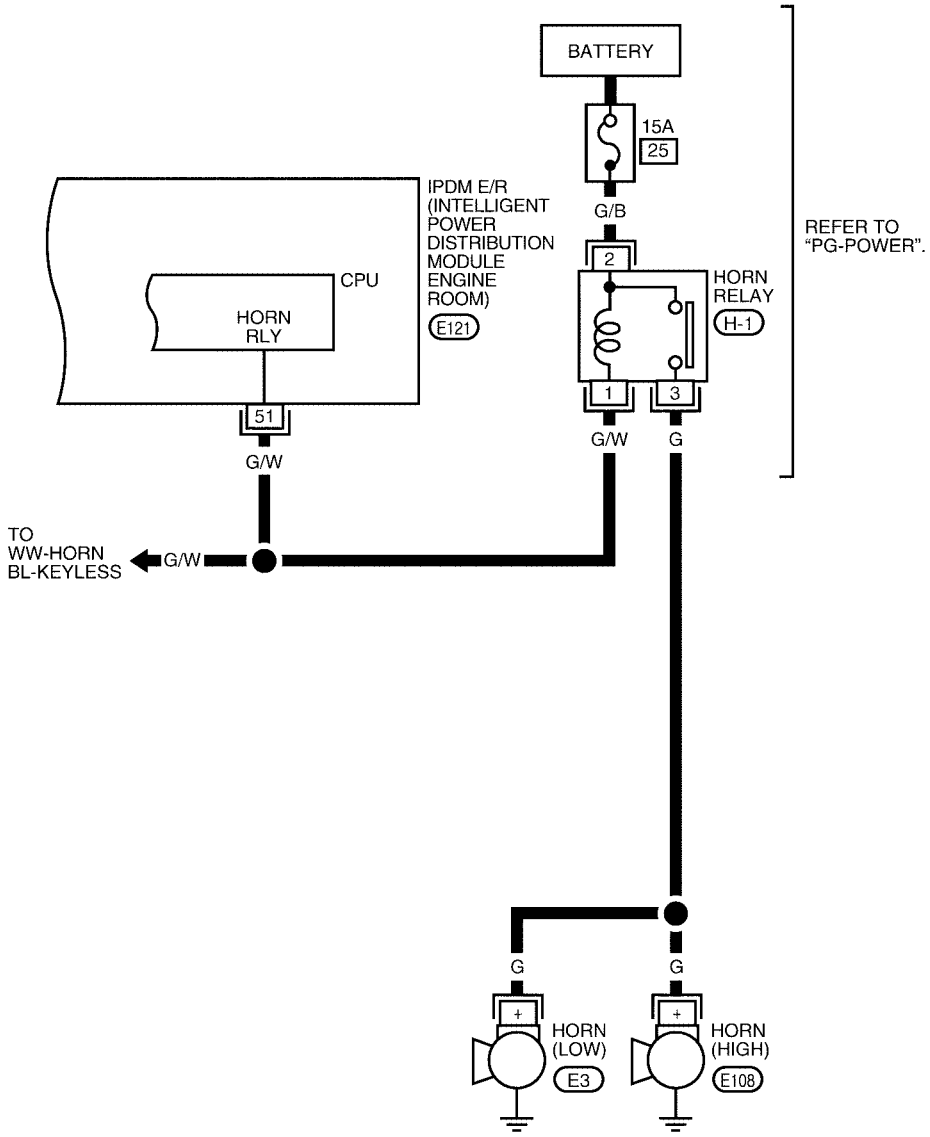


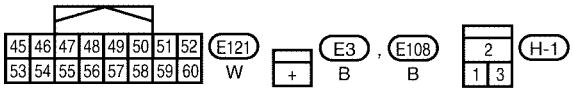


WIWA1272E

## CONSULT-II Function (BCM)

EIS003S0

CONSULT-II can display each diagnostic item using the diagnostic test modes shown following.

| BCM diagnostic test item | Diagnostic mode | Description |
|---|---|---|
| Inspection by part | WORK SUPPORT | Supports inspections and adjustments. Commands are transmitted to the BCM for setting the status suitable for required operation, input/output signals are received from the BCM and received date is displayed. |
| | DATA MONITOR | Displays BCM input/output data in real time. |
| | ACTIVE TEST | Operation of electrical loads can be checked by sending drive signal to them. |
| | SELF-DIAG RESULTS | Displays BCM self-diagnosis results. |
| | CAN DIAG SUPPORT MNTR | The result of transmit/receive diagnosis of CAN communication can be read. |
| | ECU PART NUMBER | BCM part number can be read. |
| | CONFIGURATION | Performs BCM configuration read/write functions. |

### CONSULT-II INSPECTION PROCEDURE

**CAUTION:**

**If CONSULT-II is used with no connection of CONSULT-II CONVERTER, malfunctions might be detected in self-diagnosis depending on control unit which carries out CAN communication.**

1. With the ignition switch OFF, connect CONSULT-II and CONSULT-II CONVERTER to the data link connector, and turn the ignition switch ON.

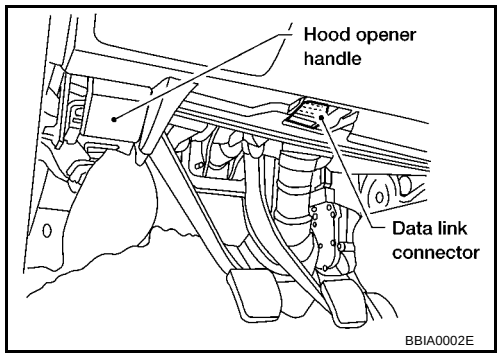


2. Touch "START (NISSAN BASED VHCL)".

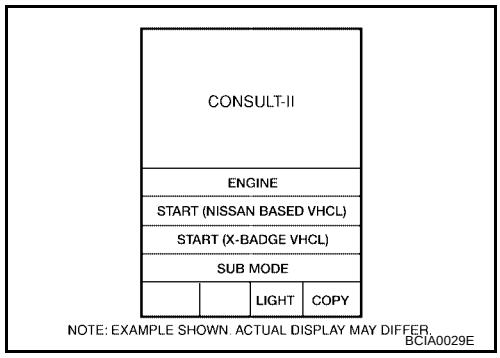


3. Touch "BCM" on the "SELECT SYSTEM" screen.
   If BCM is not indicated, refer to GI-39, "CONSULT-II Data Link Connector (DLC) Circuit" .

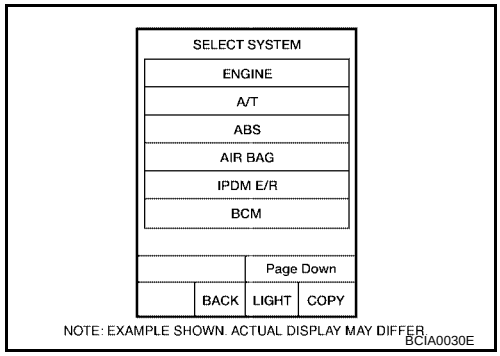

4. Touch "THEFT ALM" on the "SELECT TEST ITEM" screen.
   - WORK SUPPORT, DATA MONITOR and ACTIVE TEST are available for the vehicle security system.

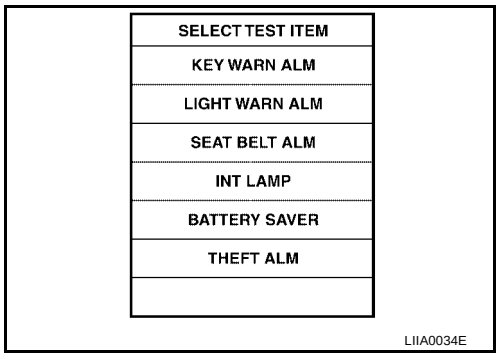


## CONSULT-II APPLICATION ITEM

### Work Support

| Test Item | Description |
|---|---|
| SECURITY ALARM SET | This mode can confirm and change security alarm ON-OFF setting. |
| THEFT ALM TRG | The switch which triggered vehicle security alarm is recorded. This mode is able to confirm and erase the record of vehicle security alarm. The trigger data can be erased by touching “CLEAR” on CONSULT-II screen. |

### Data Monitor

| Monitored Item | Description |
|---|---|
| IGN ON SW | Indicates [ON/OFF] condition of ignition switch. |
| ACC ON SW | Indicates [ON/OFF] condition of ignition switch in ACC position. |
| KEYLESS LOCK | Indicates [ON/OFF] condition of lock signal from keyfob. |
| KEYLESS UNLOCK | Indicates [ON/OFF] condition of unlock signal from keyfob. |
| KEYLESS TRUNK | Indicates [ON/OFF] condition of trunk open signal from keyfob. |
| TRNK OPNR SW | Indicates [ON/OFF] condition of trunk opener switch. |
| TRUNK CYL SW | Indicates [ON/OFF] condition of trunk key cylinder switch. |
| TRNK OPN MNTR | Indicates [ON/OFF] condition of trunk lid status. |
| DOOR SW-DR | Indicates [ON/OFF] condition of front door switch LH. |
| DOOR SW-AS | Indicates [ON/OFF] condition of front door switch RH. |
| DOOR SW-RR | Indicates [ON/OFF] condition of rear door switch RH. |
| DOOR SW-RL | Indicates [ON/OFF] condition of rear door switch LH. |
| KEY CYL LK SW | Indicates [ON/OFF] condition of lock signal from key cylinder switch. |
| KEY CYL UN SW | Indicates [ON/OFF] condition of unlock signal from key cylinder switch. |
| CDL LOCK SW | Indicates [ON/OFF] condition of lock signal from door lock/unlock switch LH and RH. |
| CDL UNLOCK SW | Indicates [ON/OFF] condition of unlock signal from door lock/unlock switch LH and RH. |

### Active Test

| Test Item | Description |
|---|---|
| THEFT IND | This test is able to check security indicator lamp operation. The lamp will be turned on when “ON” on CONSULT-II screen is touched. |
| HEADLAMP (HI) | This test is able to check vehicle security lamp operation. The headlamps will be activated for 0.5 seconds after “ON” on CONSULT-II screen is touched. |
| VEHICLE SECURITY HORN | This test is able to check vehicle security horn operation. The horns will be activated for 0.5 seconds after “ON” on CONSULT-II screen is touched. |

## Trouble Diagnosis

EIS003S1

### WORK FLOW

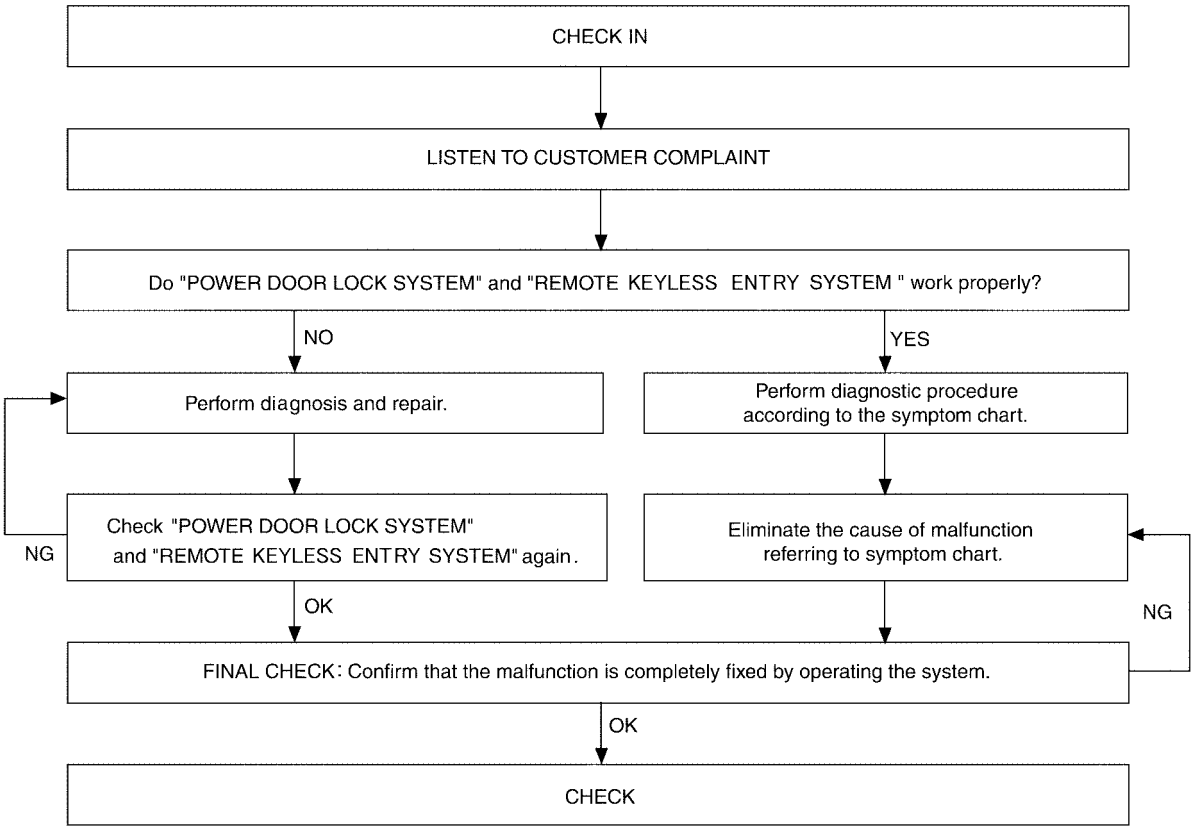


WIIA0599E

- "POWER DOOR LOCK SYSTEM" Diagnosis refer to BL-17, "POWER DOOR LOCK SYSTEM" .
- "REMOTE KEYLESS ENTRY SYSTEM" Diagnosis refer to BL-39, "REMOTE KEYLESS ENTRY SYSTEM" .

## Preliminary Check

EIS003S2

The system operation is canceled by turning ignition switch to ACC at any step between START and ARMED in the following flow chart.

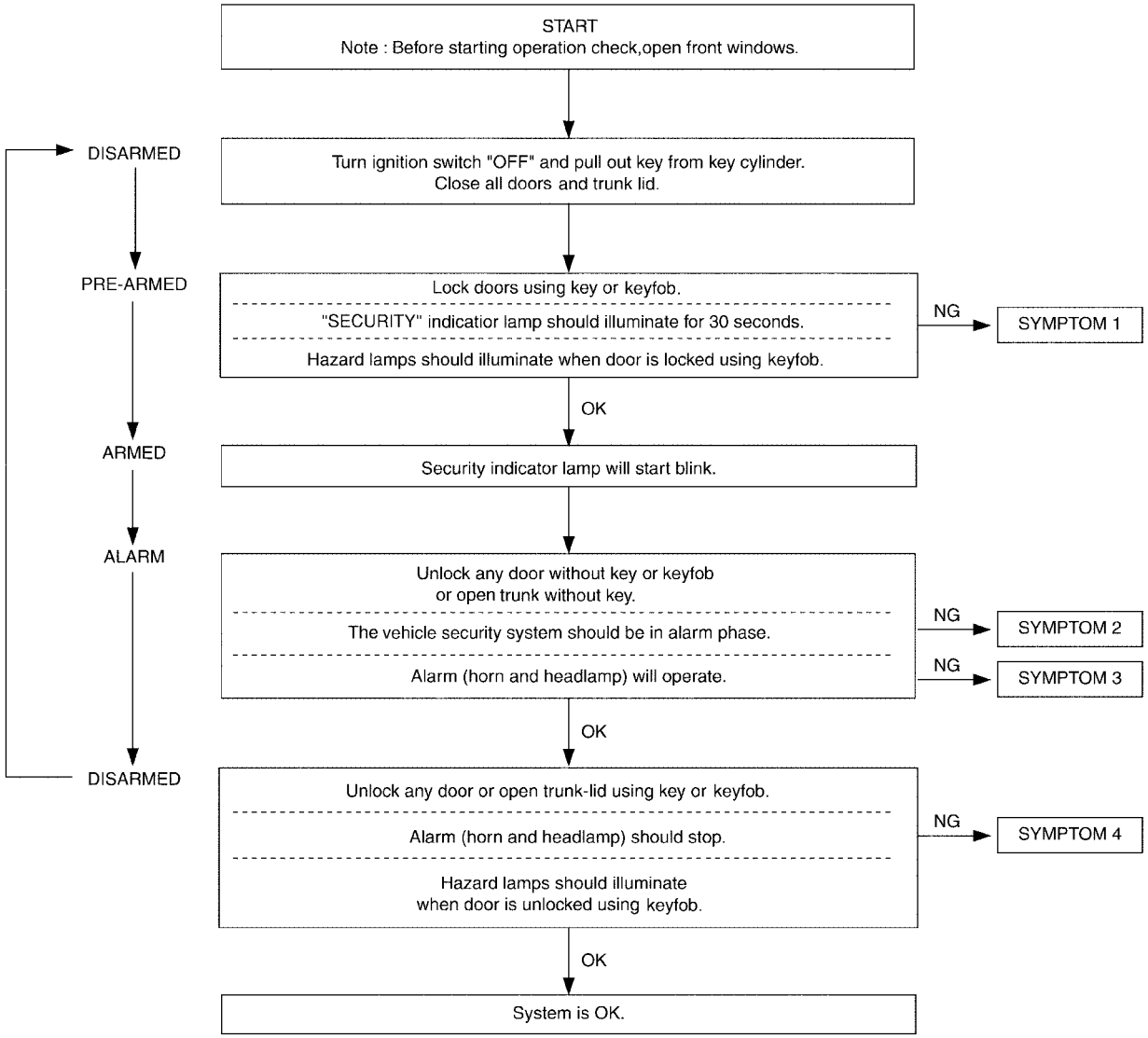


LIIA0568E

After performing preliminary check, go to symptom chart.

## Symptom Chart

EIS003S3

| PROCEDURE / SYMPTOM | | | Diagnostic procedure |
|---|---|---|---|
| 1 | Vehicle security system cannot be set by ···· | All items | Diagnostic Procedure 1 (Door, hood and trunk lamp and trunk release solenoid switch check)<br>Refer to BL-96, "Diagnostic Procedure 1" . |
| | | | If the above systems are “OK”, replace BCM. |
| | | Lock/unlock switch | Diagnostic Procedure 6 (Door lock/unlock switch check)<br>Refer to BL-100, "Diagnostic Procedure 6" . |
| | | | If the above systems are “OK”, check main power window and door lock/ unlock switch. |
| | | Door outside key | Diagnostic Procedure 3 (Door key cylinder switch check)<br>Refer to BL-100, "Diagnostic Procedure 3" . |
| | | | If the above systems are “OK”, check main power window and door lock/ unlock switch. |
| | Security indicator does not turn “ON”. | | Diagnostic Procedure 2 (Security indicator lamp check)<br>Refer to BL-99, "Diagnostic Procedure 2" . |
| | | | If the above systems are “OK”, replace BCM. |
| 2 | *1 Vehicle security system does not alarm when …. | Any door is opened. | Diagnostic Procedure 1 (Door and trunk room lamp switch check)<br>Refer to BL-96, "Diagnostic Procedure 1" . |
| | | | If the above systems are “OK”, replace BCM. |
| 3 | Vehicle security alarm does not activate. | Horn alarm | Diagnostic Procedure 5 (Vehicle security horn alarm check)<br>Refer to BL-100, "Diagnostic Procedure 5" . |
| | | | If the above systems are “OK”, check horn system.<br>Refer to WW-31, "HORN" . |
| | | Head lamp alarm | Diagnostic Procedure 5 (Head lamp alarm check)<br>Refer to BL-100, "Diagnostic Procedure 5" . |
| | | | If the above systems are “OK”, replace BCM. |
| 4 | Vehicle security system cannot be canceled by ···· | Door outside key | Diagnostic Procedure 3 (Door key cylinder switch check)<br>Refer to BL-100, "Diagnostic Procedure 3" . |
| | | | If the above systems are “OK”, check main power window and door lock/ unlock switch. |
| | | Trunk lid key | Diagnostic Procedure 4 (Trunk lid key cylinder switch check)<br>Refer to BL-100, "Diagnostic Procedure 4" . |
| | | | If the above systems are “OK”, replace BCM. |
| | | Keyfob | Check remote keyless entry function |
| | | | If the above systems are “OK”, replace BCM. |

*1 : Make sure the system is in the armed phase.

## Diagnostic Procedure 1

EIS003S4

1-1 DOOR SWITCH CHECK

### 1. CHECK DOOR SWITCH INPUT SIGNAL

**With CONSULT-II**

Check door switches ("DOOR SW-RL", “DOOR SW-RR”, “DOOR SW-DR” and “DOOR SW-AS”) in “DATA MONITOR” mode with CONSULT-II.

| Monitor item | Condition | |
|---|---|---|
| DOOR SW-RL | OPEN | : ON |
| | CLOSE | : OFF |
| DOOR SW-RR | OPEN | : ON |
| | CLOSE | : OFF |
| DOOR SW-DR | OPEN | : ON |
| | CLOSE | : OFF |
| DOOR SW-AS | OPEN | : ON |
| | CLOSE | : OFF |

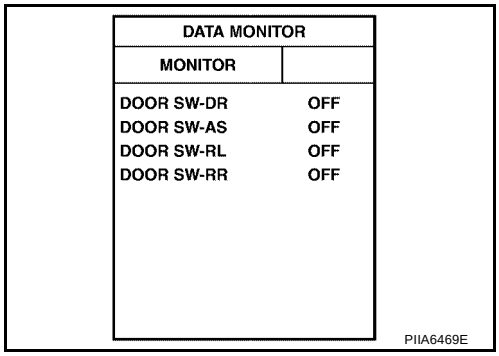


**Without CONSULT-II**

Check voltage between BCM harness connector terminals 12, 13, 62 and 63 and ground.

| Component | Terminals ( + ) | Terminals ( - ) | Condition | Voltage (V) (Approx.) |
|---|---|---|---|---|
| Front door switch RH | 12 | Ground | OPEN | 0 |
| | | | CLOSE | Battery voltage |
| Rear door switch RH | 13 | Ground | OPEN | 0 |
| | | | CLOSE | Battery voltage |
| Front door switch LH | 62 | Ground | OPEN | 0 |
| | | | CLOSE | Battery voltage |
| Rear door switch LH | 63 | Ground | OPEN | 0 |
| | | | CLOSE | Battery voltage |

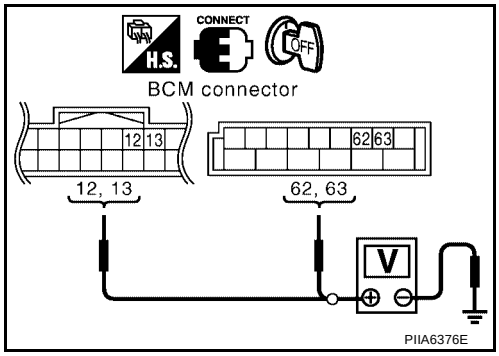


OK or NG

OK >> Door switch circuit is OK.
NG >> GO TO 2.

## 2. CHECK DOOR SWITCH CIRCUIT

1. Turn ignition switch OFF.
2. Disconnect door switch and BCM.
3. Check continuity between door switch connector B8 (front LH) or B108 (front RH) terminal 2, B18 (rear LH) or B116 (rear RH) terminal 1 and BCM connector M18, M20 terminals 12, 13, 62 and 63

**2 - 62 : Continuity should exist.**
**2 - 12 : Continuity should exist.**
**1 - 63 : Continuity should exist.**
**1 - 13 : Continuity should exist.**

4. Check continuity between door switch connector B8 (front LH) or B108 (front RH) terminal 2, B18 (rear LH) or B116 (rear RH) terminal 1 and ground.

**2 - Ground : Continuity should not exist.**
**1 - Ground : Continuity should not exist.**

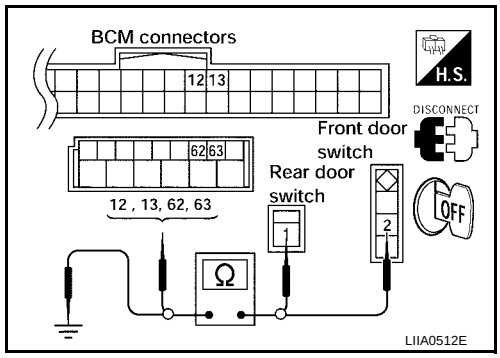


OK or NG

OK >> GO TO 3.
NG >> Repair or replace harness.

## 3. CHECK DOOR SWITCHES

Check continuity between door switch connector terminals 1, 2 and ground part of door switch.

| Component | Terminals | Condition | Continuity |
|---|---|---|---|
| Front door switch LH/RH | 2 – Ground part of door switch | Released | Yes |
| | | Pushed | No |
| Rear door switch LH/RH | 1 – Ground part of door switch | Released | Yes |
| | | Pushed | No |

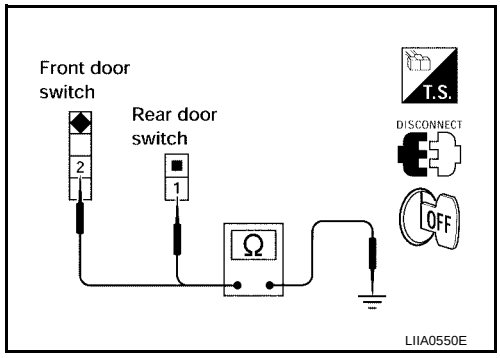


OK or NG

OK >> GO TO 4.
NG >> Replace door switch.

## 4. CHECK BCM OUTPUT SIGNAL

1. Connect BCM.
2. Check voltage between BCM harness connector M18, M20 terminals 12, 13, 62 and 63 and ground.

| Component | Terminals | | Condition | Voltage (V) (Approx.) |
|---|---|---|---|---|
| | ( + ) | ( - ) | | |
| Front door switch RH | 12 | Ground | OPEN | 0 |
| | | | CLOSE | Battery voltage |
| Rear door switch RH | 13 | Ground | OPEN | 0 |
| | | | CLOSE | Battery voltage |
| Front door switch LH | 62 | Ground | OPEN | 0 |
| | | | CLOSE | Battery voltage |
| Rear door switch LH | 63 | Ground | OPEN | 0 |
| | | | CLOSE | Battery voltage |

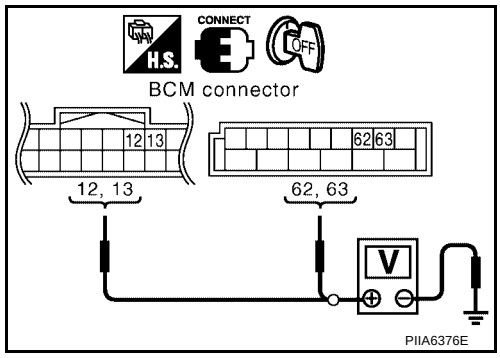


OK or NG

OK >> Check the condition harness and the connector.
NG >> Replace BCM. Refer to BCS-20, "BCM" .

1-2 TRUNK LAMP AND TRUNK RELEASE SOLENOID SWITCH CHECK

## 1. CHECK TRUNK LAMP SWITCH AND TRUNK RELEASE SOLENOID INPUT SIGNAL

With CONSULT-II

Check “TRNK OPN MNTR” in "DATA MONITOR" mode with CONSULT-II.

**When trunk lid is open : TRNK OPN MNTR ON**

**When trunk lid is closed : TRNK OPN MNTR OFF**

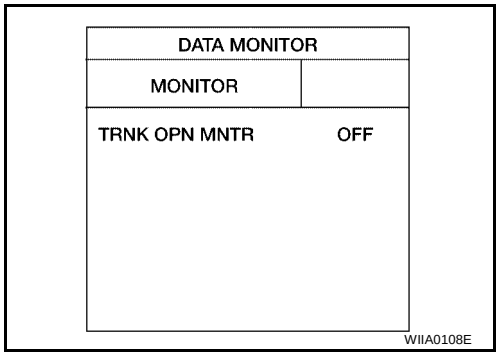


Without CONSULT-II

Check voltage between BCM harness connector M20 terminal 57 (V/W) and ground.

| Connector | Terminals | | Condition of trunk | Voltage (V) (Approx.) |
|---|---|---|---|---|
| | (+) | (-) | | |
| M20 | 57 | Ground | Open | 0 |
| | | | Closed | Battery voltage |

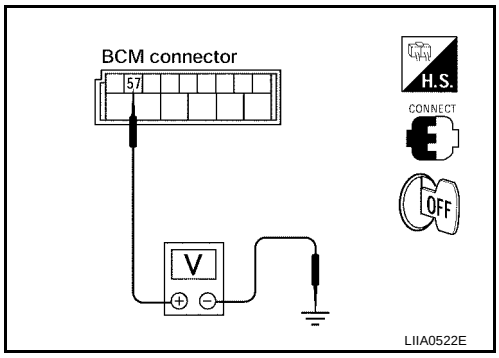


OK or NG

OK >> Trunk room lamp and trunk release solenoid switch is OK.

NG >> GO TO 2.

## 2. CHECK TRUNK LAMP AND TRUNK RELEASE SOLENOID SWITCH

1. Turn ignition switch OFF.
2. Disconnect trunk lamp and trunk release solenoid switch.
3. Check continuity between trunk lamp and trunk release solenoid switch terminals 1 and 2.

| Terminals | Condition | Continuity |
|---|---|---|
| 1 – 2 | Closed | No |
| | Open | Yes |

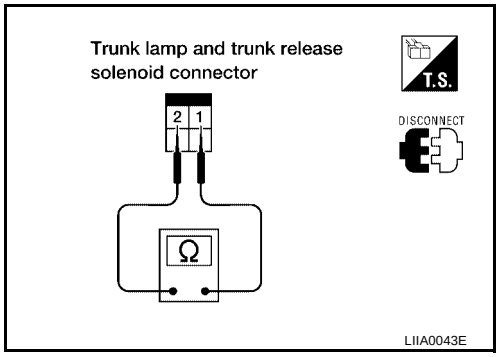


OK or NG

OK >> Check the following:

- Trunk lamp and trunk release solenoid switch ground circuit
- Harness for open or short between trunk lamp and trunk release solenoid switch and BCM

NG >> Replace trunk lamp and trunk release solenoid switch. Refer to BL-78, "Removal and Installation of Trunk Lid Lock" .

## Diagnostic Procedure 2

EIS003S5

SECURITY INDICATOR LAMP CHECK

### 1. SECURITY INDICATOR LAMP ACTIVE TEST

With CONSULT-II

Check "THEFT IND" in "ACTIVE TEST" mode with CONSULT-II.

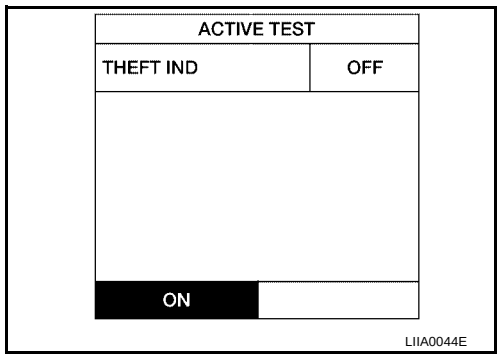


Without CONSULT-II

1. Disconnect BCM.
2. Check voltage between BCM harness connector M18 terminal 23 and ground.

| Connector | Terminals | | Condition | Voltage (V) (Approx.) |
|---|---|---|---|---|
| | (+) | (-) | | |
| M18 | 23 | Ground | ON | 0 |
| | | | OFF | Battery voltage |

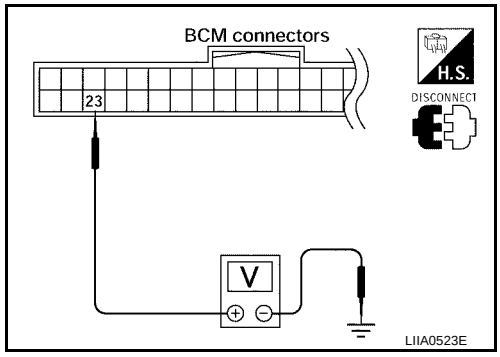


OK or NG

OK >> Security indicator lamp is OK.

NG >> GO TO 2.

### 2. SECURITY INDICATOR LAMP CHECK

Check indicator lamp condition.

OK or NG

OK >> GO TO 3.

NG >> Replace indicator lamp.

### 3. CHECK HARNESS CONTINUITY

1. Turn ignition switch OFF.
2. Disconnect BCM and security indicator lamp.
3. Check continuity between BCM connector (A) M18 terminal 23 and security indicator lamp harness connector (B) M201 terminal 2.

**23 - 2 : Continuity should exist.**

4. Check continuity between BCM connector (A) M18 terminal 23 and ground.

**23 - Ground : Continuity should not exist.**

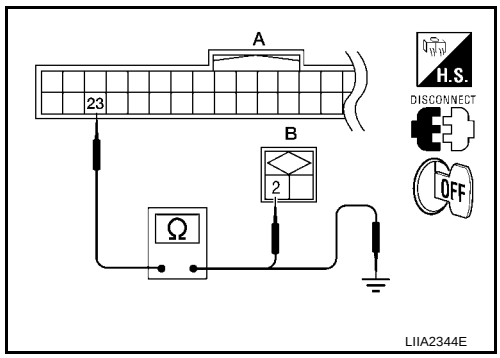


OK or NG

OK >> Check the following:

- 10A fuse [No. 19, located in fuse block (J/B)]
- Harness for open or short between security indicator lamp and fuse

NG >> Repair or replace harness.

## Diagnostic Procedure 3

EIS003S6

### 1. FRONT DOOR LOCK ASSEMBLY LH (KEY CYLINDER SWITCH) CHECK

Check front door lock assembly LH (key cylinder switch) with key.

Do doors lock/unlock when using the key?

YES >> Front door lock assembly LH (key cylinder switch) is OK.
NO >> Check front door lock assembly LH (key cylinder switch) circuit. Refer to BL-37, "Front Door Lock Assembly LH (Key Cylinder Switch) Check" .

## Diagnostic Procedure 4

EIS003S7

VEHICLE SECURITY HORN ALARM CHECK

### 1. CHECK HORN OPERATION

Check if horn sounds with horn switch.

Does horn operate?

YES >> Check harness for open or short between IPDM E/R and horn relay.
NO >> Check horn circuit. Refer to WW-31, "HORN" .

## Diagnostic Procedure 5

EIS003S8

VEHICLE SECURITY HEADLAMP ALARM CHECK

### 1. CHECK VEHICLE SECURITY HEADLAMP ALARM OPERATION

Check if headlamps operate with lighting switch.

Do headlamps come on when turning switch ON?

YES >> Headlamp alarm is OK.
NO >> Check headlamp system. Refer to LT-6, "HEADLAMP (FOR USA)" .

## Diagnostic Procedure 6

EIS003S9

DOOR LOCK/UNLOCK SWITCH CHECK

### 1. CHECK DOOR LOCK/UNLOCK SWITCH INPUT SIGNAL

Check if power door lock operates with door lock/unlock switch.

Do doors lock/unlock when using each door lock/unlock switch?

YES >> Door lock/unlock switch is OK.
NO >> Refer to BL-33, "Door Lock/Unlock Switch Check" .

# NVIS(NISSAN VEHICLE IMMOBILIZER SYSTEM-NATS)

PFP:28591

## Component Parts and Harness Connector Location

EIS003SA

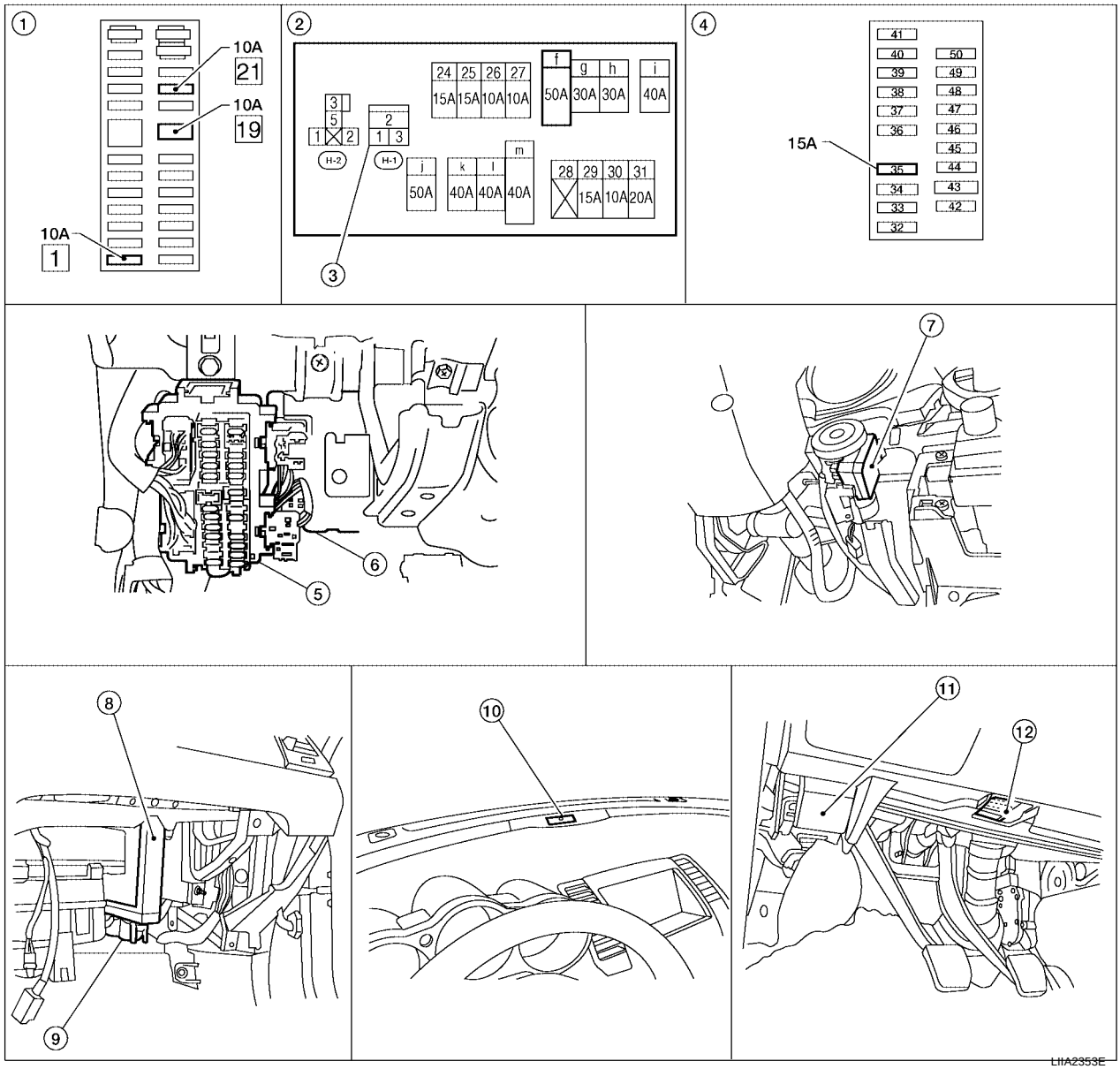


1. Fuse block (J/B)
2. Fuse and fusible link box
3. Horn relay
4. IPDM E/R fuse layout
5. Fuse block (J/B) (view with instrument panel removed)
6. BCM M18, M19, M20 (view with instrument panel removed)
7. NATS antenna amp. M21 (view with lower driver instrument panel removed)
8. ECM (view with glove box removed)
9. ECM harness connectors M82, F54 (view with glove box removed)
10. Security indicator lamp M201
11. Hood opener handle
12. Data link connector M22

## System Description

EIS003SB

NVIS (Nissan Vehicle Immobilizer System-NATS) has the following immobilizer functions:

- Since only NVIS (NATS) ignition keys, whose IDs have been registered into the ECM and BCM, allow the engine to run, operation of a stolen vehicle without a NVIS (NATS) registered key is prevented by NVIS (NATS).
  NVIS (NATS) will immobilize the engine if someone tries to start it without the registered key of NVIS (NATS).
- All of the originally supplied ignition key IDs have been NVIS (NATS) registered.
  If requested by the vehicle owner, a maximum of five key IDs can be registered into the NVIS (NATS) components.
- The security indicator blinks when the ignition switch is in OFF or ACC position. NVIS (NATS) warns outsiders that the vehicle is equipped with the anti-theft system.
- When NVIS (NATS) detects a malfunction, the security indicator lamp lights up while ignition key is in the ON position.
- NVIS (NATS) trouble diagnoses, system initialization and additional registration of other NVIS (NATS) ignition key IDs must be carried out using CONSULT-II hardware and CONSULT-II NVIS (NATS) software.
  When NVIS (NATS) initialization has been completed, the ID of the inserted ignition key is automatically NVIS (NATS) registered. Then, if necessary, additional registration of other NVIS (NATS) ignition key IDs can be carried out.
  Regarding the procedures of NVIS (NATS) initialization and NVIS (NATS) ignition key ID registration, refer to CONSULT-II Operation Manual NATS-IVIS/NVIS.
- **When servicing a malfunction of the NVIS (NATS) (indicated by lighting up of security indicator lamp) or registering another NVIS (NATS) ignition key ID, it may be necessary to re-register original key identification. Therefore, be sure to receive ALL KEYS from vehicle owner.**

## System Composition

EIS003SC

The immobilizer function of the NVIS (NATS) consists of the following:

- NATS ignition key
- NATS antenna amp. located in the ignition key cylinder
- Body control module (BCM)
- Engine control module (ECM)
- Security indicator

**NOTE:**
**The communication between ECM and BCM uses the CAN communication system.**

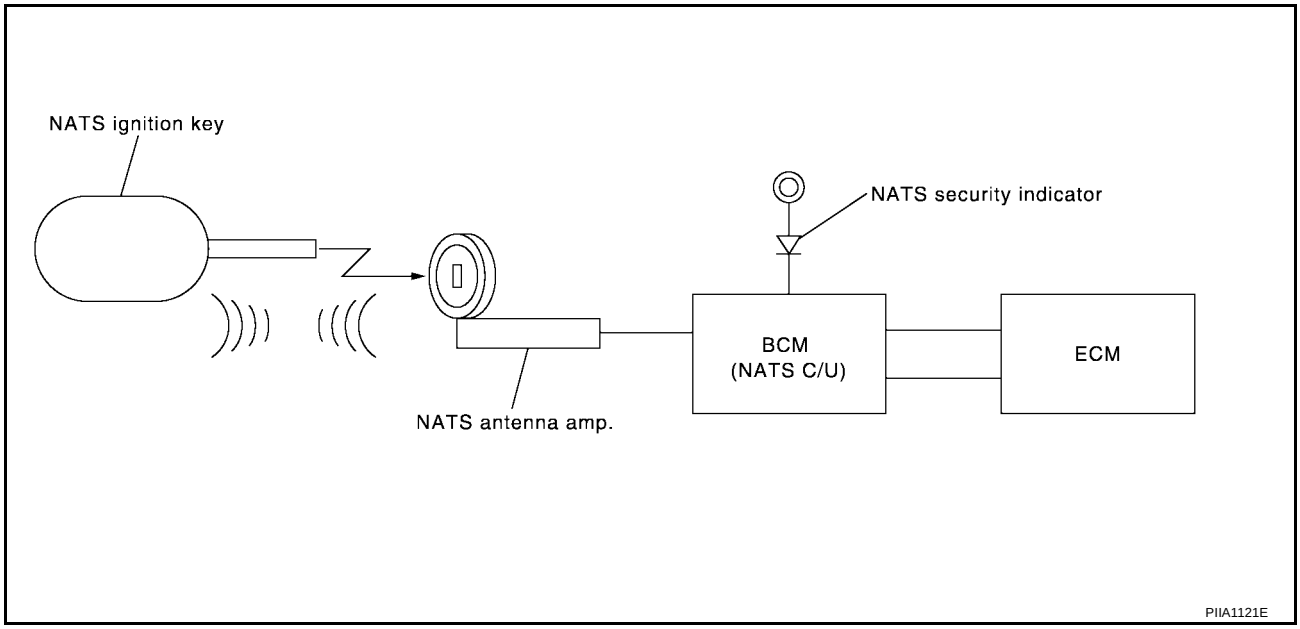

## ECM Re-communicating Function

EIS003SD

The following procedure can automatically perform re-communication of ECM and BCM, but only when the ECM has been replaced with a new one which has never been energized on-board.
(In this step, initialization procedure by CONSULT-II is not necessary)

**NOTE:**

- **When registering new Key IDs or replacing the ECM other than brand new, refer to CONSULT-II Operation Manual NATS-IVIS/NVIS.**
- **If multiple keys are attached to the key holder, separate them before work.**
- **Distinguish keys with unregistered key ID from those with registered ID.**

1. Install ECM.
2. Using a registered key (*1), turn ignition switch to ON.
   *1: To perform this step, use the key that has been used before performing ECM replacement.
3. Maintain ignition switch in ON position for at least 5 seconds.
4. Turn ignition switch to OFF.
5. Start engine.
   If engine can be started, procedure is completed.
   If engine cannot be started, refer to CONSULT-II Operation Manual NATS-IVIS/NVIS and initialize control unit.

## Wiring Diagram — NATS —

EIS003SE

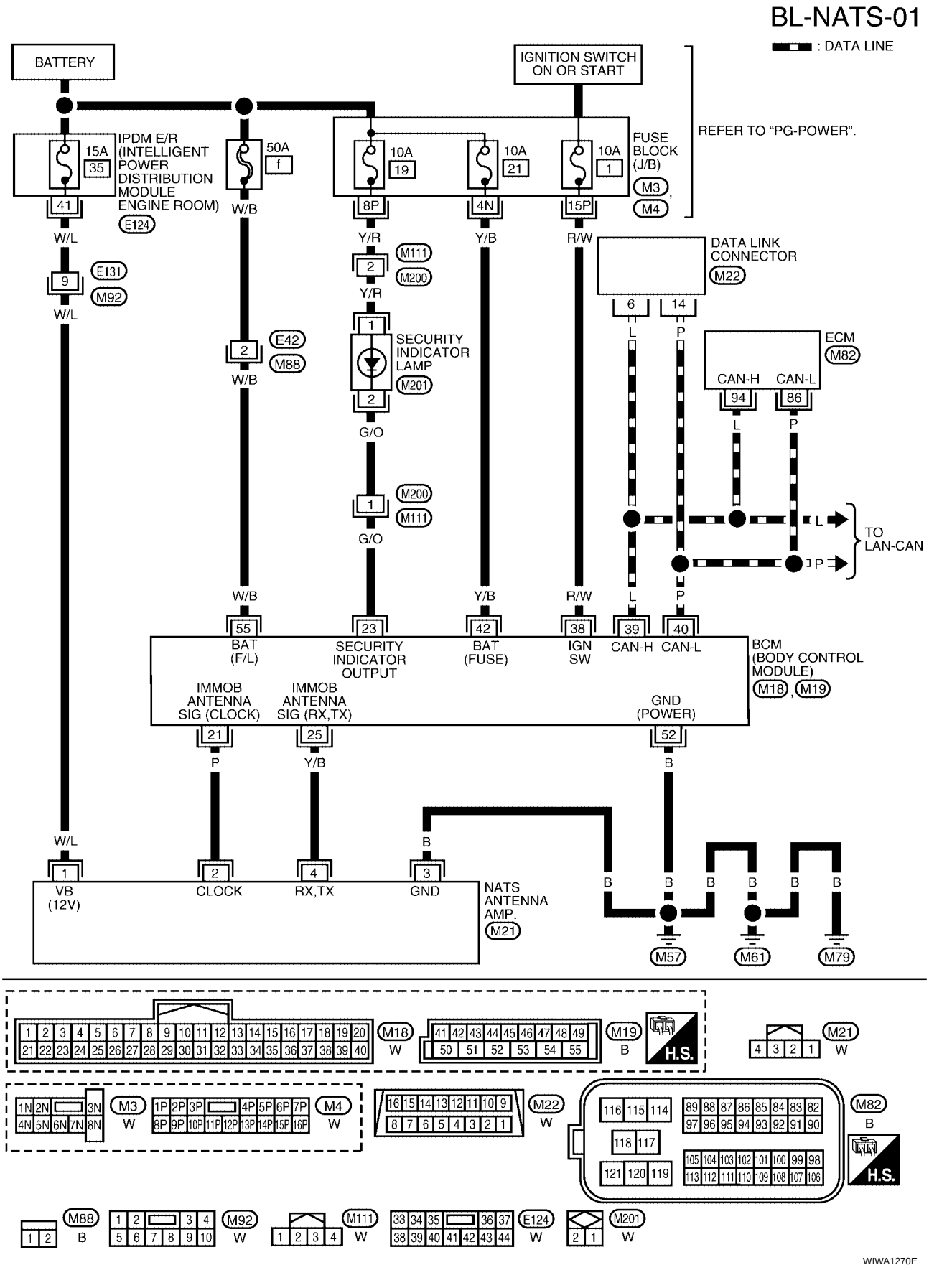

## Terminals and Reference Value for BCM

EIS003SF

| Terminal | Wire Color | Item | Condition | Voltage (V) (Approx.) |
|---|---|---|---|---|
| 21 | P | NATS antenna amp. | Ignition switch (OFF → ON) | Just after turning ignition switch ON: Pointer of tester should move. |
| 23 | G/O | Security indicator lamp | Goes OFF → illuminates (Every 2.4 seconds) | Battery voltage → 0 |
| 25 | Y/B | NATS antenna amp. | Ignition switch (OFF → ON) | Just after turning ignition switch ON: Pointer of tester should move. |
| 38 | R/W | Ignition switch (ON or START) | Ignition switch (ON or START position) | Battery voltage |
| 39 | L | CAN-H | — | — |
| 40 | P | CAN-L | — | — |
| 42 | Y/B | Battery power supply | — | Battery voltage |
| 52 | B | Ground | — | 0 |
| 55 | W/B | Battery power supply | — | Battery voltage |

## CONSULT-II

EIS003SG

### CONSULT-II INSPECTION PROCEDURE

**CAUTION:**

**If CONSULT-II is used with no connection of CONSULT-II CONVERTER, malfunctions might be detected in self-diagnosis depending on control unit which carries out CAN communication.**

1. Turn ignition switch OFF.
2. Insert NVIS (NATS) program card into CONSULT-II.

   **Program card : NATS (AEN04A-1) or later**

3. Connect CONSULT-II and CONSULT-II CONVERTER to data link connector.

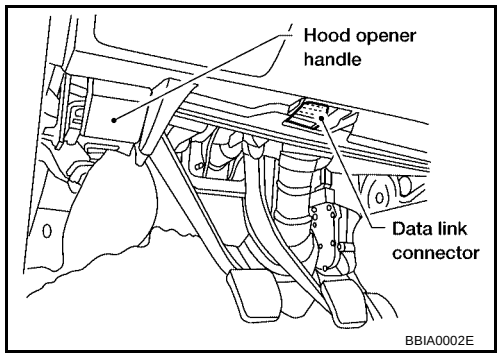


4. Turn ignition switch ON.
5. Touch “START”.

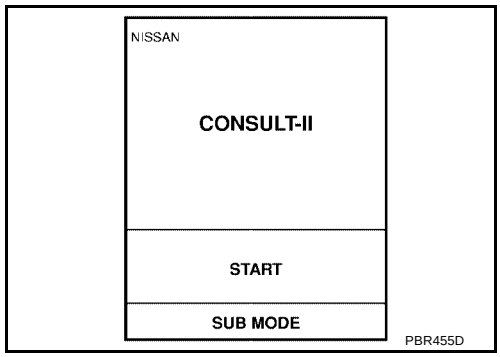

6. Touch "OTHER".

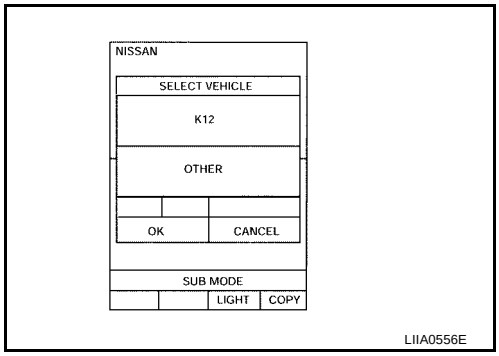


7. Select “NATS V.5.0”.
   If “NATS V5.0” is not indicated, go to GI-39, "CONSULT-II Data Link Connector (DLC) Circuit" .

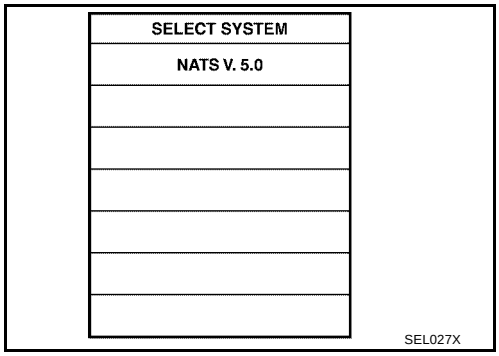


8. Perform each diagnostic test mode according to each service procedure.

**For further information, see the CONSULT-II Operation Manual NATS-IVIS/NVIS.**

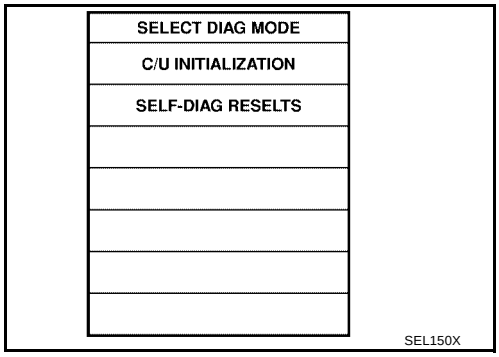


## CONSULT-II DIAGNOSTIC TEST MODE FUNCTION

| CONSULT-II DIAGNOSTIC TEST MODE | Description |
|---|---|
| C/U INITIALIZATION | When replacing any of the following components, C/U initialization and re-registration of all NATS ignition keys are necessary.<br>[(NATS ignition key/BCM/ECM] |
| SELF-DIAG RESULTS | Detected items (screen terms) are as shown in the chart.<br>Refer to BL-107, "NVIS (NATS) SELF-DIAGNOSTIC RESULTS ITEM CHART" . |

**NOTE:**

- When any initialization is performed, all IDs previously registered will be erased and all NATS ignition keys must be registered again.
- The engine cannot be started with an unregistered key. In this case, the system will show “DIFFERENCE OF KEY” or “LOCK MODE” as a self-diagnostic result on the CONSULT-II screen.
- In rare case, “CHAIN OF ECM-IMMU” might be stored as a self-diagnostic result during key registration procedure, even if the system is not malfunctioning.

## HOW TO READ SELF-DIAGNOSTIC RESULTS

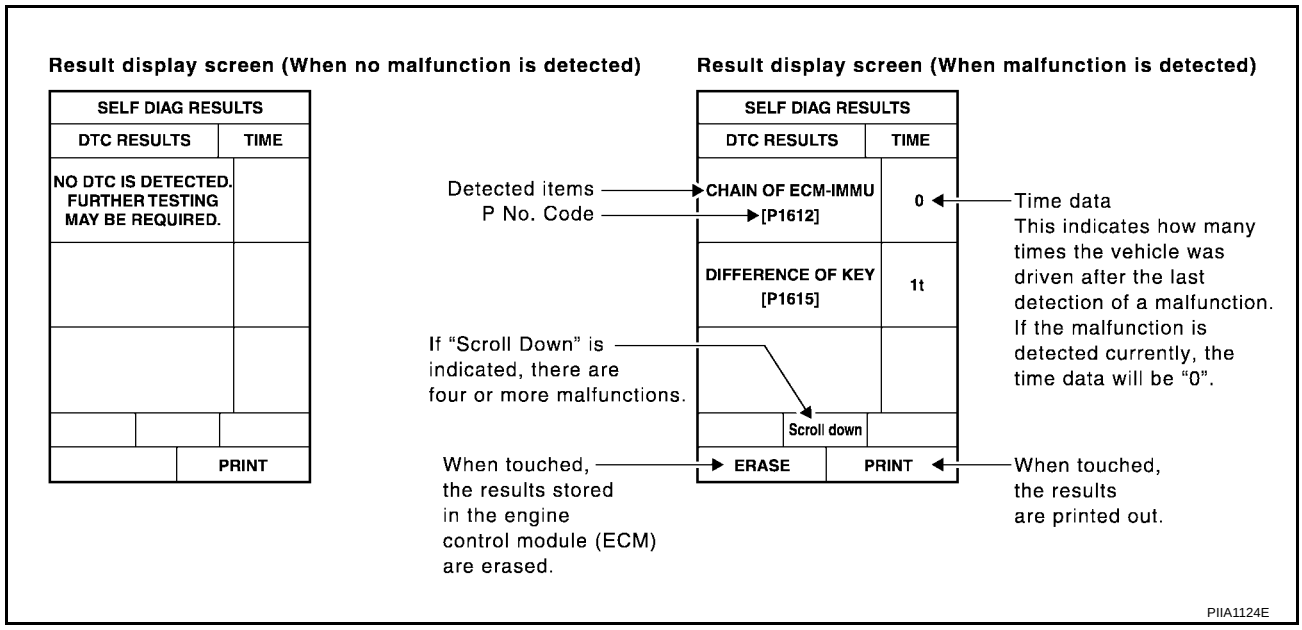


## NVIS (NATS) SELF-DIAGNOSTIC RESULTS ITEM CHART

| Detected items [NVIS (NATS) program card screen terms] | P No. Code (Self-diagnostic result of "ENGINE") | Malfunction is detected when..... | Reference page |
|---|---|---|---|
| CHAIN OF ECM-IMMU [P1612] | NATS MAL-FUNCTION P1612 | Communication impossible between ECM and BCM<br>In rare case, "CHAIN OF ECM-IMMU" might be stored during key registration procedure, even if the system is not malfunctioning. | Refer to BL-111 . |
| DIFFERENCE OF KEY [P1615] | NATS MAL-FUNCTION P1615 | BCM can receive the key ID signal but the result of ID verification between key ID and BCM is NG. | Refer to BL-112 . |
| CHAIN OF IMMU-KEY [P1614] | NATS MAL-FUNCTION P1614 | BCM cannot receive the key ID signal. | Refer to BL-115 . |
| ID DISCORD, IMM-ECM [P1611] | NATS MAL-FUNCTION P1611 | The result of ID verification between BCM and ECM is NG. System initialization is required. | Refer to BL-113 . |
| LOCK MODE [P1610] | NATS MAL-FUNCTION P1610 | When the starting operation is carried out five or more times consecutively under the following conditions, NVIS (NATS) will shift the mode to one which prevents the engine from being started.<br>● Unregistered ignition key is used.<br>● BCM or ECM's malfunctioning. | Refer to BL-114 . |
| DON'T ERASE BEFORE CHECK-ING ENG DIAG | — | All engine trouble codes except NVIS (NATS) trouble code has been detected in ECM. | Refer to BL-108 . |

## Work Flow

EIS003SH

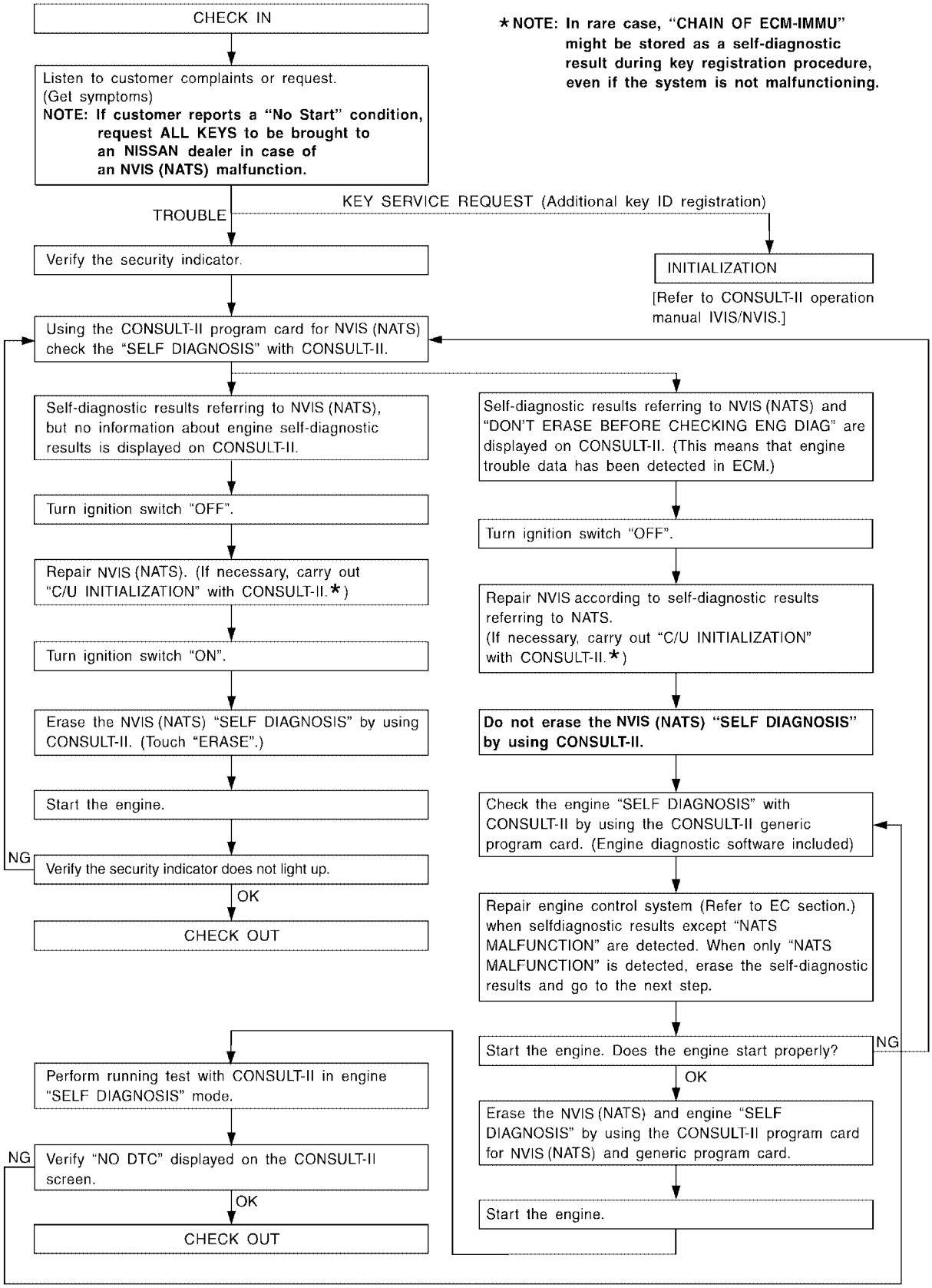


LIIA1152E

# Trouble Diagnoses

EIS003SI

## SYMPTOM MATRIX CHART 1

### Self-diagnosis related item

| Symptom | Displayed "SELF-DIAG RESULTS" on CONSULT-II screen. | Diagnostic Procedure (Reference page) | System (Malfunctioning part or mode) | Reference Part No. Of Illustration On System Diagram |
|---|---|---|---|---|
| ● Security indicator lighting up*<br>● Engine cannot be started | CHAIN OF ECM-IMMU [P1612] | PROCEDURE 1 (BL-111 ) | In rare case, "CHAIN OF ECM-IMMU" might be stored during key registration procedure, even if the system is not malfunctioning. | — |
| | | | Open circuit in battery voltage line of BCM circuit | C1 |
| | | | Open circuit in ignition line of BCM circuit | C2 |
| | | | Open circuit in ground line of BCM circuit | C3 |
| | | | Open or short circuit between BCM and ECM communication line | C4 |
| | | | ECM | B |
| | | | BCM | A |
| | DIFFERENCE OF KEY [P1615] | PROCEDURE 2 (BL-112 ) | Unregistered key | D |
| | | | BCM | A |
| | CHAIN OF IMMU-KEY [P1614] | PROCEDURE 5 (BL-115 ) | Malfunction of key ID chip | E5 |
| | | | Communication line between ANT/ AMP and BCM: Open circuit or short circuit of battery voltage line or ground line | E1 |
| | | | | E2 |
| | | | Open circuit in power source line of ANT/ AMP circuit | E3 |
| | | | Open circuit in ground line of ANT/ AMP circuit | E4 |
| | | | NATS antenna amp. | E6 |
| | | | BCM | A |
| | ID DISCORD, IMM-ECM [P1611] | PROCEDURE 3 (BL-113 ) | System initialization has not yet been completed. | F |
| | | | ECM | B |
| | LOCK MODE [P1610] | PROCEDURE 4 (BL-114 ) | LOCK MODE | D |
| Security indicator lighting up* | DON'T ERASE BEFORE CHECKING ENG DIAG | WORK FLOW (BL-108 ) | Engine trouble data and NVIS (NATS) trouble data have been detected in ECM | — |

*: When NVIS (NATS) detects trouble, the security indicator lights up while ignition key is in the "ON" position.

## SYMPTOM MATRIX CHART 2

### Non self-diagnosis related item

| Symptom | Diagnostic Procedure (Reference page) | System (Malfunctioning part or mode) | Reference Part No. Of Illustration On System Diagram |
|---|---|---|---|
| Security indicator does not light up*. | PROCEDURE 6 (BL-118 ) | Combination meter (security indicator lamp) | — |
| | | Open circuit between fuse and BCM | — |
| | | BCM | A |

*: CONSULT-II self-diagnostic results display screen “no malfunction is detected”.

## DIAGNOSTIC SYSTEM DIAGRAM

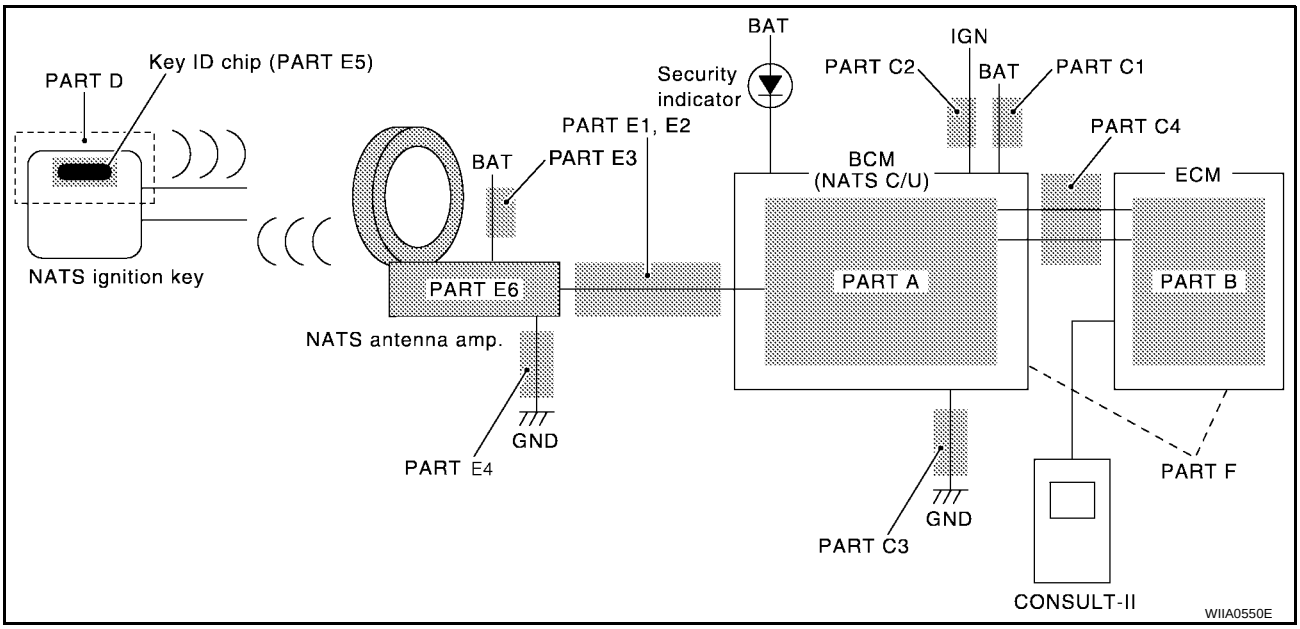

## Diagnostic Procedure 1

EIS003SJ

**Self-diagnostic results:**
**"CHAIN OF ECM-IMMU" displayed on CONSULT-II screen**
**First perform the "SELF-DIAG RESULTS" in "BCM" with CONSULT-II, then perform the trouble diagnosis of malfunction system indicated "SELF-DIAG RESULTS" of "BCM". Refer to BL-105, "CONSULT-II"**
**.**

### 1. CONFIRM SELF-DIAGNOSTIC RESULTS

Confirm SELF-DIAGNOSTIC RESULTS "CHAIN OF ECM-IMMU" displayed on CONSULT-II screen.

**NOTE:**
In rare case, "CHAIN OF ECM-IMMU" might be stored during key registration procedure, even if the system is not malfunctioning.

Is CONSULT-II screen displayed as above?

Yes >> GO TO 2.
No >> GO TO BL-109, "SYMPTOM MATRIX CHART 1" .

| SELF DIAGNOSIS | |
|---|---|
| DTC RESULTS | TIME |
| CHAIN OF ECM-IMMU [P1612] | 0 |
| | |
| | |

PIIA1260E

### 2. CHECK POWER SUPPLY CIRCUIT FOR BCM

1. Disconnect BCM.
2. Check voltage between BCM connector M19 terminal 55 and ground.

**55 - Ground : Battery voltage**

OK or NG

OK >> GO TO 3.
NG >> Check the following:

- 50A fusible link (letter **f** , located in fuse and fusible link box)
- Harness for open or short between fuse and BCM connector. **Ref. Part No. C1**

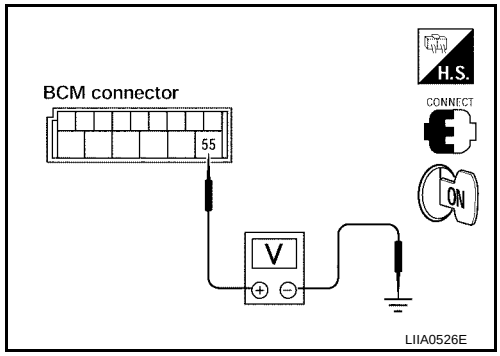


### 3. CHECK IGN SW. ON SIGNAL

1. Turn ignition switch ON.
2. Check voltage between BCM connector M18 terminal 38 and ground.

**38 - Ground : Battery voltage**

OK or NG

OK >> GO TO 4.
NG >> Check the following:

- 10A fuse [No. 1, located in the fuse block (J/B)]
- Harness for open or short between fuse and BCM connector. Ref. part No. C2

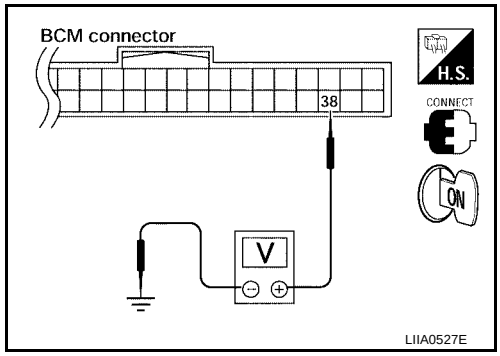

## 4. CHECK GROUND CIRCUIT FOR BCM

1. Turn ignition switch OFF.
2. Check continuity between BCM connector M18 terminal 52 and ground.

**52 - Ground : Continuity should exist.**

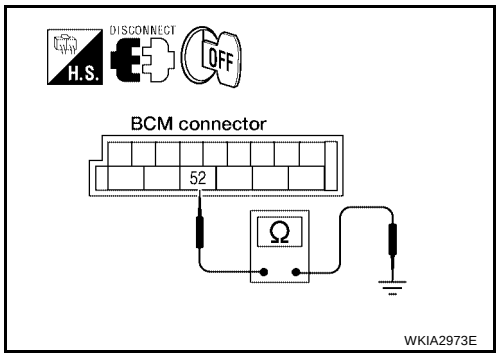


OK or NG

OK >> GO TO 5.
NG >> Repair or replace harness. **Ref. part No. C3**

## 5. REPLACE BCM

1. Replace BCM. Refer to BCS-20, "BCM" . **Ref. part No. A**
2. Perform initialization with CONSULT-II.
   For initialization, refer to “CONSULT-II Operation Manual NATS-IVIS/NVIS”.

Does the engine start?

YES >> BCM is malfunctioning.
NO >>
- ECM is malfunctioning.
- Replace ECM. **Ref. part No. B**
- Perform initialization or re-communicating function.
- For initialization, refer to “CONSULT-II Operation Manual NATS-IVIS/NVIS”.
- For re-communicating function, refer to BL-103, "ECM Re-communicating Function" .

# Diagnostic Procedure 2

EIS003SK

**Self-diagnostic results:**
**“DIFFERENCE OF KEY” displayed on CONSULT-II screen**

## 1. CONFIRM SELF-DIAGNOSTIC RESULTS

Confirm SELF-DIAGNOSTIC RESULTS “DIFFERENCE OF KEY” displayed on CONSULT-II screen.

Is CONSULT-II screen displayed as above?

YES >> GO TO 2.
NO >> GO TO BL-109, "SYMPTOM MATRIX CHART 1" .

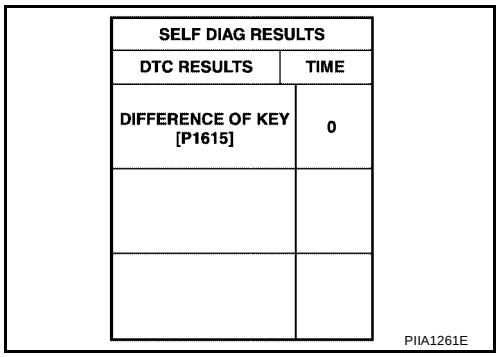

| SELF DIAG RESULTS | |
|---|---|
| DTC RESULTS | TIME |
| DIFFERENCE OF KEY [P1615] | 0 |
| | |
| | |

PIIA1261E

## 2. PERFORM INITIALIZATION WITH CONSULT-II

Perform initialization with CONSULT-II. Re-register all NATS ignition key IDs.
For initialization and registration of NATS ignition key IDs, refer to “CONSULT-II Operation Manual NATS-IVIS/NVIS”.

**NOTE:**
If the initialization is not completed or malfunctions, CONSULT-II shows message on the screen.

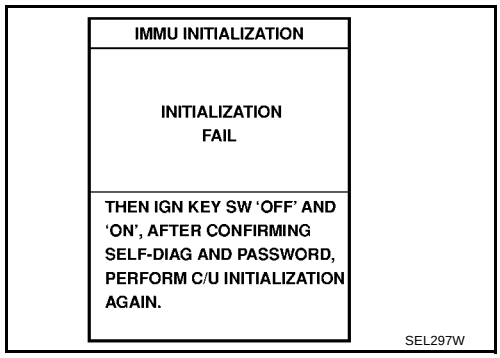


Can the system be initialized and can the engine be started with re-registered NATS ignition key?

YES >> ● Ignition key ID was unregistered. **Ref. part No. D**

NO >> ● BCM is malfunctioning.
- Replace BCM. Refer to BCS-20, "BCM" . **Ref. part No. A**
- Perform initialization with CONSULT-II.
- For initialization, refer to “CONSULT-II Operation Manual NATS-IVIS/NVIS”.

# Diagnostic Procedure 3

EIS003SL

**Self-diagnostic results:**
**“ID DISCORD, IMM-ECM” displayed on CONSULT-II screen**

## 1. CONFIRM SELF-DIAGNOSTIC RESULTS

Confirm SELF-DIAGNOSTIC RESULTS “ID DISCORD, IMM-ECM” displayed on CONSULT-II screen.

**NOTE:**
“ID DISCORD IMM-ECM”:
Registered ID of BCM is in discord with that of ECM.

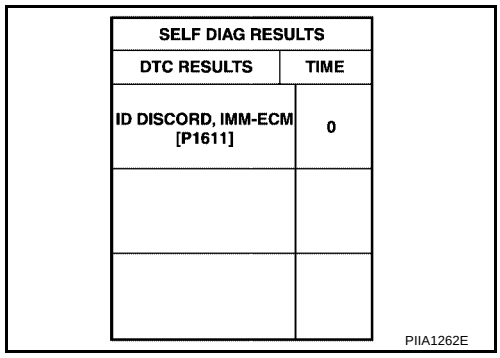


Is CONSULT-II screen displayed as above?

YES >> GO TO 2.

NO >> GO TO BL-109, "SYMPTOM MATRIX CHART 1" .

## 2. PERFORM INITIALIZATION WITH CONSULT-II

Perform initialization with CONSULT-II. Re-register all NATS ignition key IDs.
For initialization, refer to “CONSULT-II Operation Manual NATS-IVIS/NVIS”.

**NOTE:**
If the initialization is not completed or malfunctions, CONSULT-II shows message on the screen.

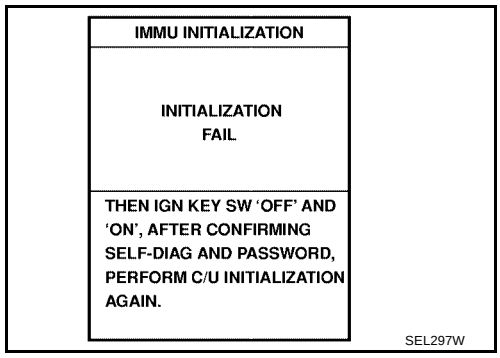


Can the system be initialized?

YES >> ● Start engine. (END)
- System initialization had not been completed. **Ref. part No. F**

NO >> ● ECM is malfunctioning.
- Replace ECM. **Ref. part No. B**
- Perform initialization with CONSULT-II.
  For initialization, refer to “CONSULT-II Operation Manual NATS-IVIS/NVIS”.

## Diagnostic Procedure 4

EIS003SM

**Self-diagnostic results:**
**“LOCK MODE” displayed on CONSULT-II screen**

### 1. CONFIRM SELF-DIAGNOSTIC RESULTS

Confirm SELF-DIAGNOSTIC RESULTS “LOCK MODE” is displayed on CONSULT-II screen.

Is CONSULT-II screen displayed as above?

YES >> GO TO 2.
NO >> GO TO BL-109, "SYMPTOM MATRIX CHART 1" .

| SELF DIAG RESULTS | |
|---|---|
| DTC RESULTS | TIME |
| LOCK MODE [P1610] | 0 |
| | |
| | |

PIIA1264E

### 2. ESCAPE FROM LOCK MODE

1. Turn ignition switch OFF.
2. Turn ignition switch ON with registered key. (Do not start engine.) Wait 5 seconds.
3. Return the key to OFF position. Wait 5 seconds.
4. Repeat steps 2 and 3 twice (total of three cycles).
5. Start the engine.

Does engine start?

YES >> System is OK (Now system is escaped from “LOCK MODE”).
NO >> GO TO 3.

### 3. PERFORM INITIALIZATION WITH CONSULT-II

Perform initialization with CONSULT-II.
For initialization, refer to “CONSULT-II Operation Manual NATS-IVIS/NVIS”.

**NOTE:**
If the initialization is not completed or malfunctions, CONSULT-II shows the message on the screen.

Can the system be initialized?

YES >> System is OK.
NO >> GO TO 4.

| IMMU INITIALIZATION |
|---|
| INITIALIZATION FAIL |
| THEN IGN KEY SW ‘OFF’ AND ‘ON’, AFTER CONFIRMING SELF-DIAG AND PASSWORD, PERFORM C/U INITIALIZATION AGAIN. |

SEL297W

## 4. PERFORM INITIALIZATION WITH CONSULT-II AGAIN

1. Replace BCM.
2. Perform initialization with CONSULT-II.
   For initialization, refer to “CONSULT-II Operation Manual NATS-IVIS/NVIS”.

**NOTE:**
If the initialization is not completed or malfunctions, CONSULT-II shows the message on the screen.

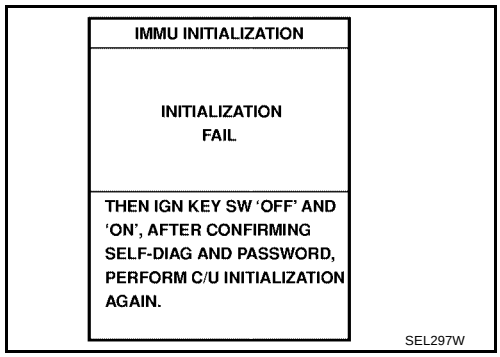


Can the system be initialized?

YES >> System is OK. BCM is malfunctioning. **Ref. part No. A**
NO >>
- ECM is malfunctioning.
- Replace ECM. **Ref. part No. B**
- Perform initialization with CONSULT-II.
  For initialization, refer to “CONSULT-II Operation Manual NATS-IVIS/NVIS”.

# Diagnostic Procedure 5

EIS003SN

**Self-diagnostic results:**
**“CHAIN OF IMMU-KEY” displayed on CONSULT-II screen**

## 1. CONFIRM SELF-DIAGNOSTIC RESULTS

Confirm SELF-DIAGNOSTIC RESULTS “CHAIN OF IMMU-KEY” displayed on CONSULT-II screen.

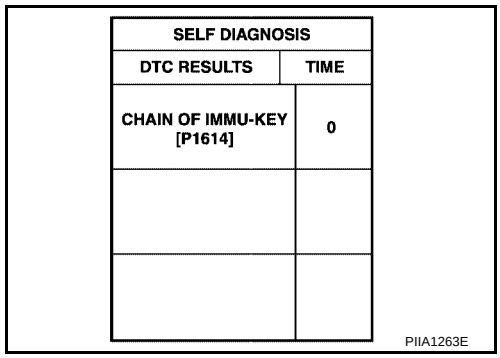

| SELF DIAGNOSIS | |
|---|---|
| DTC RESULTS | TIME |
| CHAIN OF IMMU-KEY [P1614] | 0 |
| | |
| | |

PIIA1263E

Is CONSULT-II screen displayed as above?

YES >> GO TO 2.
NO >> GO TO BL-109, "SYMPTOM MATRIX CHART 1" .

## 2. CHECK NATS ANTENNA AMP. INSTALLATION

Check NATS antenna amp. installation. Refer to BL-119, "How to Replace NATS Antenna Amp." .

OK or NG

OK >> GO TO 3.
NG >> Reinstall NATS antenna amp. correctly.

## 3. CHECK NVIS (NATS) IGNITION KEY ID CHIP

Start engine with another registered NATS ignition key.

Does the engine start?

YES >>
- Ignition key ID chip is malfunctioning.
- Replace the ignition key. **Ref. part No. E5**
- Perform initialization with CONSULT-II.
  For initialization, refer to “CONSULT-II Operation Manual NATS-IVIS/NVIS”.

NO >> GO TO 4.

## 4. CHECK POWER SUPPLY FOR NATS ANTENNA AMP.

1. Turn ignition switch ON.
2. Check voltage between NATS antenna amp. connector M21 terminal 1 and ground.

**1 - Ground : Battery voltage**

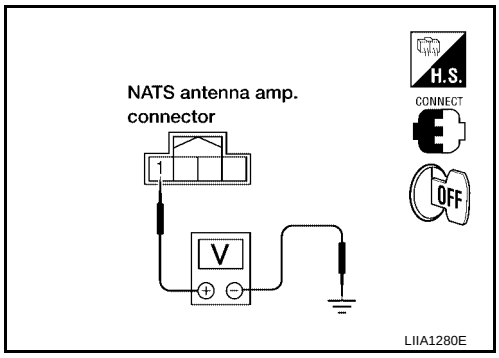


OK or NG

OK >> GO TO 5.
NG >> Repair or replace fuse or harness. **Ref. part No. E3**

## 5. CHECK NATS ANTENNA AMP. SIGNAL LINE- 1

Check voltage between NATS antenna amp. connector M21 terminal 2 and ground with analog tester.

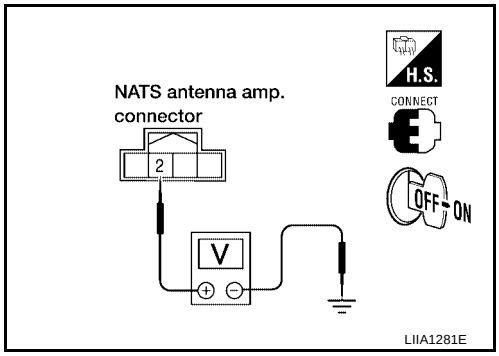


| Terminals | | Position of ignition key cylinder | Voltage (V) (Approx.) |
|---|---|---|---|
| ( + ) | ( - ) | | |
| 2 | Ground | Before inserting ignition key | Battery voltage |
| | | After inserting ignition key | Pointer of tester should move for approx. 30 seconds, then return to battery voltage |
| | | Just after turning ignition switch ON | Pointer of tester should move for approx. 1 second, then return to battery voltage |

OK or NG

OK >> GO TO 6.
NG >> ● Repair or replace harness. **Ref. part No. E1**

**NOTE:**
If harness is OK, replace BCM, perform initialization with CONSULT-II. For initialization, refer to “CONSULT-II Operation Manual NATS-IVIS/NVIS”.

## 6. CHECK NATS ANTENNA AMP. SIGNAL LINE- 2

Check voltage between NATS antenna amp. connector M21 terminal 4 and ground with analog tester.

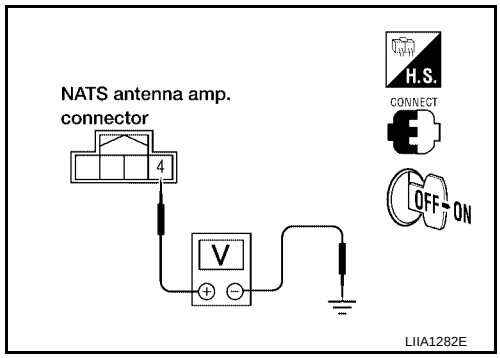


| Terminals | | Position of ignition key cylinder | Voltage (V) (Approx.) |
|---|---|---|---|
| ( + ) | ( - ) | | |
| 4 | Ground | Before inserting ignition key | Battery voltage |
| | | After inserting ignition key | Pointer of tester should move for approx. 30 seconds, then return to battery voltage |
| | | Just after turning ignition switch ON | Pointer of tester should move for approx. 1 second, then return to battery voltage |

OK or NG

OK >> GO TO 7.

NG >> ● Repair or replace harness. **Ref. part No. E2**

**NOTE:**
If harness is OK, replace BCM, refer to BCS-20, "BCM" . Perform initialization with CONSULT-II. For initialization, refer to “CONSULT-II Operation Manual NATS-IVIS/NVIS”.

## 7. CHECK NATS ANTENNA AMP. GROUND LINE CIRCUIT

1. Turn ignition switch OFF.
2. Check continuity between NATS antenna amp. connector M21 terminal 3 and ground.

**3 - Ground : Continuity should exist.**

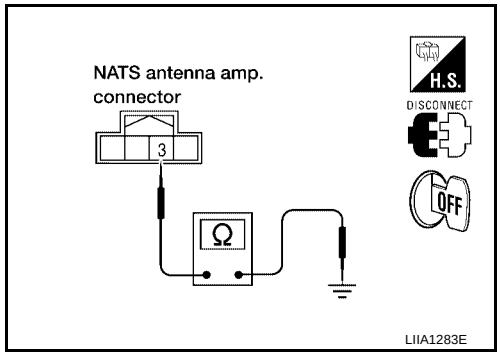


OK or NG

OK >> NATS antenna amp. is malfunctioning. **Ref. part No. E6**

NG >> ● Repair or replace harness. **Ref. part No. E4**

**NOTE:**
If harness is OK, replace BCM, refer to BCS-20, "BCM" . Perform initialization with CONSULT-II. For initialization, refer to “CONSULT-II Operation Manual NATS-IVIS/NVIS”.

## Diagnostic Procedure 6

EIS003SO

**“SECURITY INDICATOR LAMP DOES NOT LIGHT UP”**

### 1. CHECK FUSE

Check 10A fuse [No.19, located in the fuse block (J/B)].

OK or NG

OK >> GO TO 2.
NG >> Replace fuse.

### 2. CHECK SECURITY INDICATOR LAMP

1. Install 10A fuse.
2. Start engine and turn ignition switch OFF.
3. Check the security indicator lamp lights up.

**Security indicator lamp should light up.**

OK or NG

OK >> Inspection End.
NG >> GO TO 3.

### 3. CHECK SECURITY INDICATOR LAMP POWER SUPPLY CIRCUIT

1. Disconnect security indicator lamp.
2. Check voltage between security indicator lamp connector M201 terminal 1 and ground.

**1 - Ground : Battery voltage**

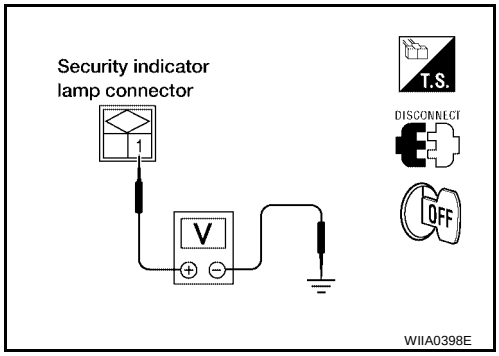


OK or NG

OK >> GO TO 4.
NG >> Repair or replace harness.

### 4. CHECK BCM (NATS CONTROL UNIT) FUNCTION

1. Connect security indicator lamp.
2. Disconnect BCM.
3. Check voltage between BCM connector M18 terminal 23 and ground.

**23 - Ground : Battery voltage**

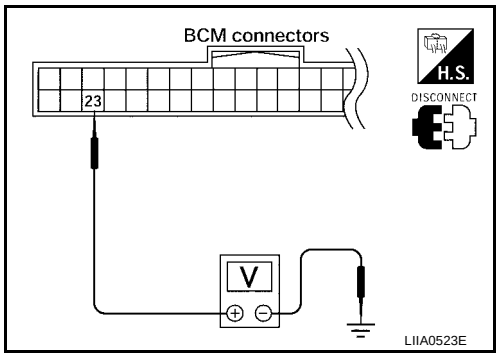


OK or NG

OK >> BCM is malfunctioning.
- Replace BCM. Refer to BCS-20, "BCM" . **Ref. part No. A**
- Perform initialization with CONSULT-II.
- For initialization, refer to “CONSULT-II Operation Manual NATS-IVIS/NVIS”.

NG >> Check the following:
- Harness for open or short between security indicator lamp and BCM (NATS control unit).
- Indicator lamp condition

## How to Replace NATS Antenna Amp.

EIS003SP

**NOTE:**

- **If NATS antenna amp. is not installed correctly, NVIS (NATS) system will not operate properly and SELF-DIAG RESULTS on CONSULT-II screen will show “LOCK MODE” or “CHAIN OF IMMU-KEY”.**
- **Initialization is not necessary when only NATS antenna amp. is replaced with a new one.**

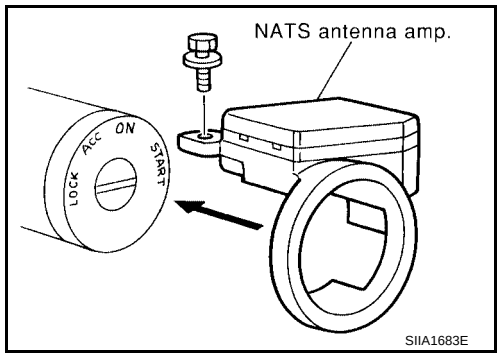

## HOMELINK UNIVERSAL TRANSCEIVER

PFP:96401

### Wiring Diagram — TRNSCV —

EIS0061W

BL-TRNSCV-01

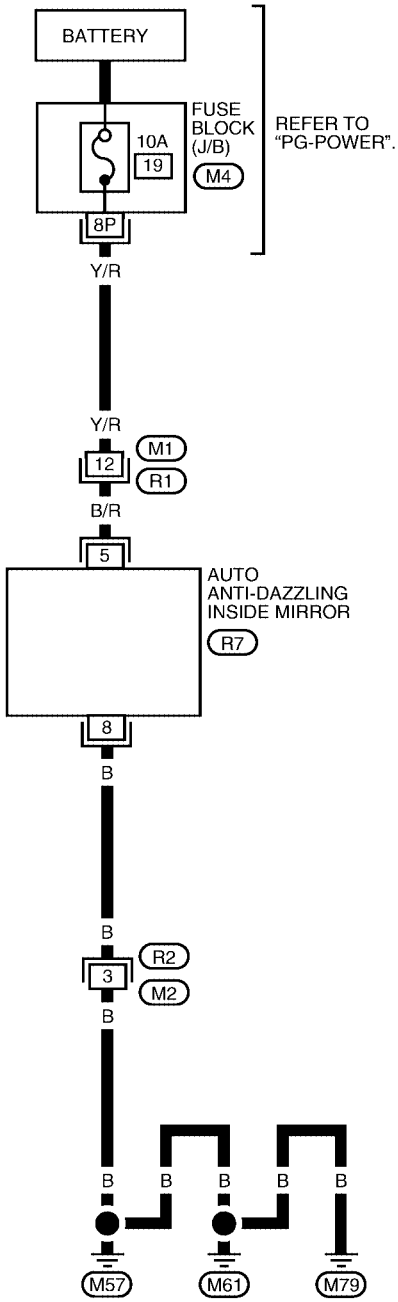


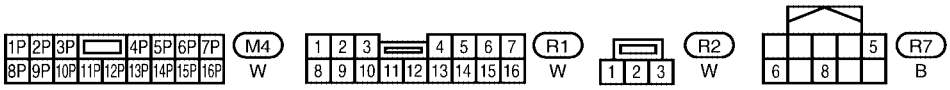


WIWA1271E

## Trouble Diagnoses

EIS0061X

### DIAGNOSTIC PROCEDURE

**SYMPTOM: Transmitter does not activate receiver.**

Before conducting the procedure given below, make sure that system receiver (garage door opener, etc.) operates with original, hand-held transmitter. If NG, receiver or hand-held transmitter is malfunctioning, not vehicle related.

### 1. ILLUMINATE CHECK

- Turn ignition switch OFF.
- Does red light (LED) of transmitter illuminate when any button is pressed?

YES or NO

YES >> GO TO 2.
NO >> GO TO 3.

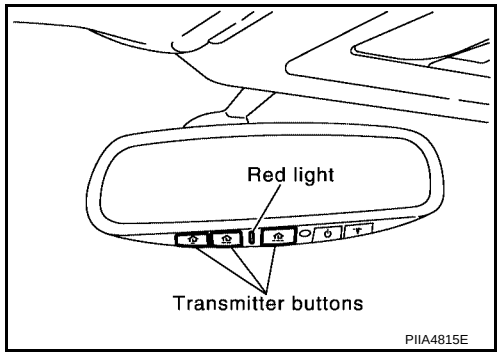


### 2. TRANSMITTER CHECK

Check transmitter with Tool.*
*For details, refer to Technical Service Bulletin.

OK or NG

OK >> Receiver or hand-held transmitter malfunction, not vehicle related.
NG >> Replace transmitter.

### 3. POWER SUPPLY CHECK

1. Disconnect transmitter.
2. Check voltage between auto anti-dazzling inside mirror (integrated homelink transmitter) connector R7 terminal 5 and ground.

**5 - Ground : Battery voltage**

OK or NG

OK >> GO TO 4.
NG >> Repair or replace fuse or harness.

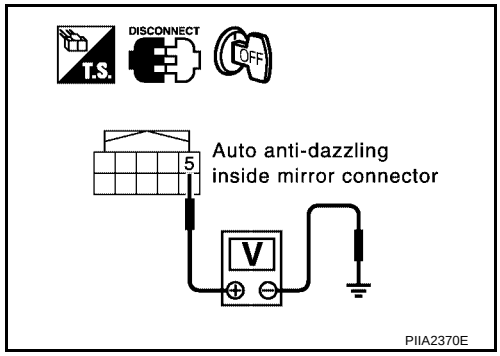

## 4. GROUND CIRCUIT CHECK

Check continuity between auto anti-dazzling inside mirror (integrated homelink transmitter) connector R7 terminal 8 (B) and body ground.

**8 - Ground : Continuity should exist.**

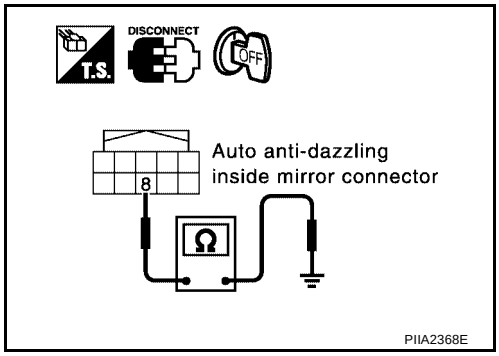


OK or NG

OK >> Replace inside mirror assembly. Refer to GW-92, "Removal" .

NG >> Repair or replace harness.

# BODY REPAIR

PFP:60100

## Body Exterior Paint Color

EIS00470

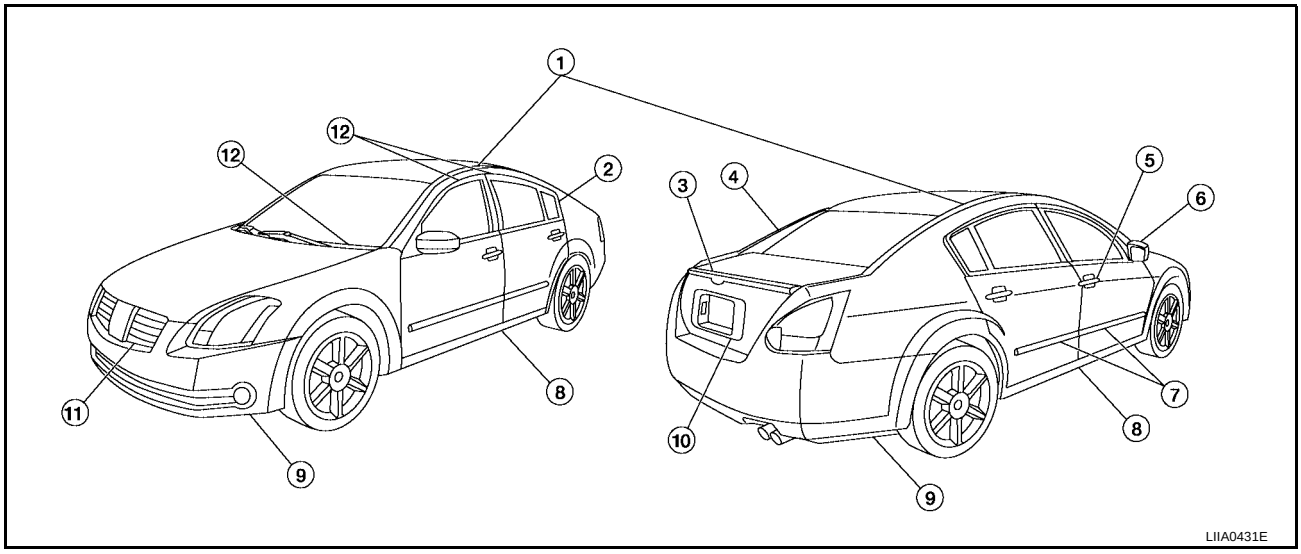


| Component | | | Color code | A15 | BW9 | CY12 | K11 | KH3 | KY1 | KY2 | QX3 |
|---|---|---|---|---|---|---|---|---|---|---|---|
| | | | Description | Red Opulence | Majestic Blue | Coral Sand | Smoke | Onyx | Liquid Silver | Spirited Bronze | Winter Frost |
| | | | Paint type | M | 2p | M | M | 2S | M | M | 3P |
| | | | Clear coat | t | t | t | t | t | t | t | t |
| 1 | Roof side molding | | Chrome | Cr | Cr | Cr | Cr | Cr | Cr | Cr | Cr |
| 2 | Rear door sash Cover | | Black | KH3 | KH3 | KH3 | KH3 | KH3 | KH3 | KH3 | KH3 |
| 3 | Rear Spoiler | | Body color | A15 | BW9 | CY12 | K11 | KH3 | KY1 | KY2 | QX3 |
| 4 | Rear pillar trim | Base | Black | KH3 | KH3 | KH3 | KH3 | KH3 | KH3 | KH3 | KH3 |
| | | Body | Chrome | Cr | Cr | Cr | Cr | Cr | Cr | Cr | Cr |
| 5 | Outside handle | | Body color | A15 | BW9 | CY12 | K11 | KH3 | KY1 | KY2 | QX3 |
| 6 | Outside mirror | Body | Body color | A15 | BW9 | CY12 | K11 | KH3 | KY1 | KY2 | QX3 |
| | | Base | Black | AG01 | AG01 | AG01 | AG01 | AG01 | AG01 | AG01 | AG01 |
| 7 | Side guard molding | Body | Body color | A15 | BW9 | CY12 | K11 | KH3 | KY1 | KY2 | QX3 |
| 8 | Center mudguard | | Body color | A15 | BW9 | CY12 | K11 | KH3 | KY1 | KY2 | QX3 |
| 9 | Bumper fascia | Body | Body color | A15 | BW9 | CY12 | K11 | KH3 | KY1 | KY2 | QX3 |
| 10 | Trunk lid finisher | | Body color | A15 | BW9 | CY12 | K11 | KH3 | KY1 | KY2 | QX3 |
| 11 | Radiator grille | Center | Chromium-plate +Smoke Clear | Cr+HFM09 | Cr+HFM09 | Cr+HFM09 | Cr+HFM09 | Cr+HFM09 | Cr+HFM09 | Cr+HFM09 | Cr+HFM09 |

| Component | | | Color code | A15 | BW9 | CY12 | K11 | KH3 | KY1 | KY2 | QX3 |
|---|---|---|---|---|---|---|---|---|---|---|---|
| | | | Description | Red Opu-lence | Majestic Blue | Coral Sand | Smoke | Onyx | Liquid Silver | Spirited Bronze | Winter Frost |
| | | | Paint type | M | 2p | M | M | 2S | M | M | 3P |
| | | | Clear coat | t | t | t | t | t | t | t | t |
| 12 | Cowl top cover | | Black | AG01 | AG01 | AG01 | AG01 | AG01 | AG01 | AG01 | AG01 |
| 13 | Door sash | | Black tape | X | X | X | X | X | X | X | X |

M: Metallic; 2S: 2-Coat Solid, 2P: 2-Coat Pearl; 3P: 3-Coat Pearl; t: New Cross Linking Clear Coat

## Body Component Parts
### UNDERBODY COMPONENT PARTS

EIS00471

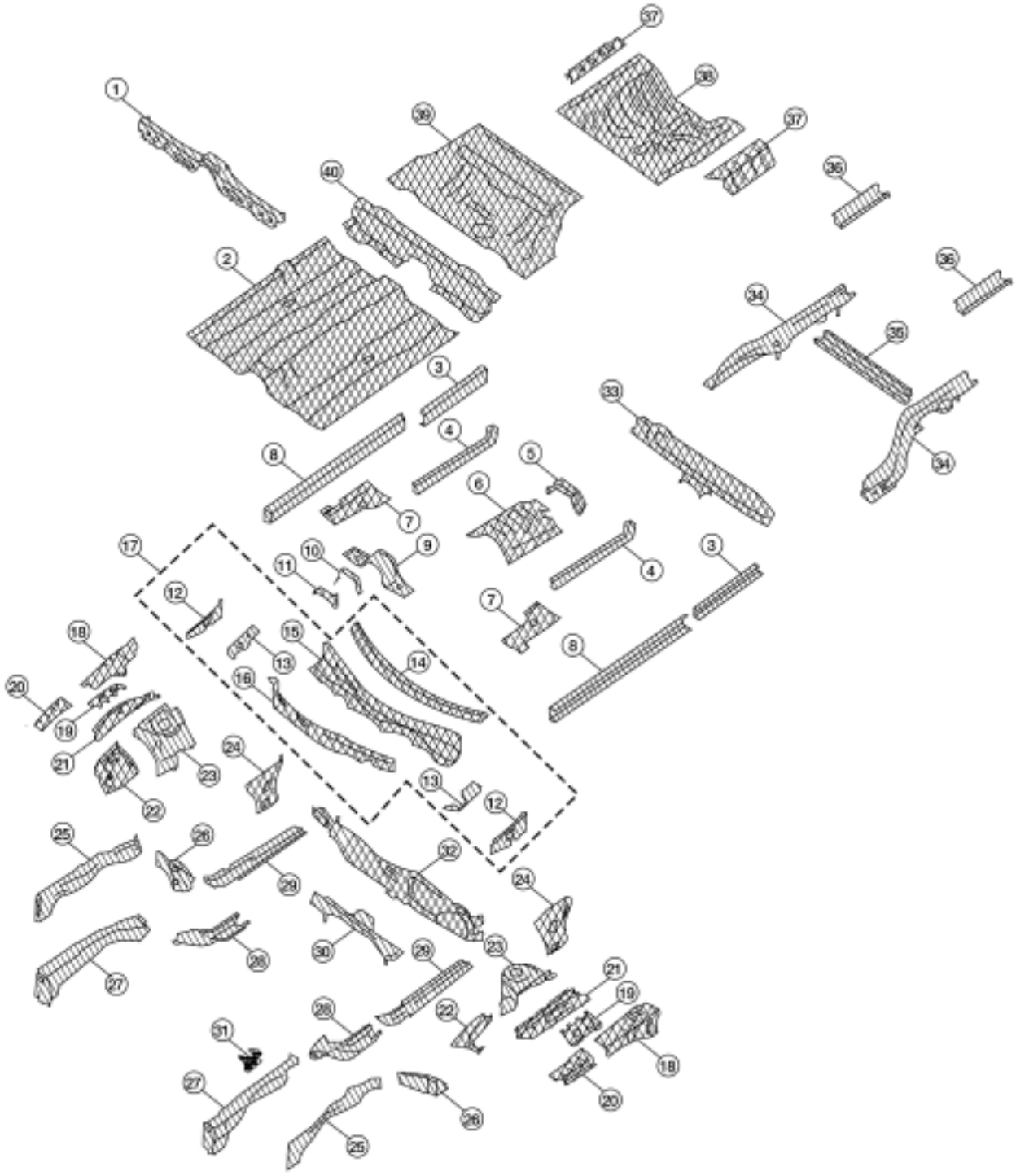

: Indicates both-side anti-corrosive precoated steel portions
: Indicates high strength steel (HSS) portions
: Indicates both-side anti-corrosive precoated steel and (HSS) portions

LIIA1831E

1. 2nd crossmember assembly
2. Front floor assembly
3. Inner sill extension RH/LH
4. Front side member rear extension RH/LH
5. Rear floor reinforcement
6. Parking brake reinforcement assembly
7. Front floor reinforcement RH/LH
8. Inner sill assembly RH/LH
9. Front floor reinforcement
10. Transmission control mounting reinforcement
11. Instrument stay bracket.
12. Cowl top side assembly RH/LH
13. Cowl top side brace RH/LH
14. Cowl top center assembly
15. Upper dash assembly
16. Front cowl top assembly
17. Air box assembly
18. Rear hoodledge reinforcement RH/LH
19. Hoodledge reinforcement gusset RH/LH
20. Front hoodledge reinforcement assembly RH/LH
21. Upper hoodledge assembly RH/LH
22. Lower front hoodledge assembly RH/LH
23. Lower rear hoodledge assembly RH/LH
24. Dash side assembly RH/LH
25. Front side member front closing plate assembly RH/LH
26. Front side member outrigger RH/LH
27. Front side member assembly RH/LH
28. Front side member extension RH/LH
29. Front side member center extension RH/LH
30. Lower dash crossmember assembly
31. Engine mounting bracket member assembly
32. Lower dash assembly
33. Rear seat crossmember
34. Rear side member assembly RH/LH
35. Rear center crossmember assembly
36. Rear side member extension RH/LH
37. Rear floor side RH/LH
38. Rear floor rear
39. Rear floor front
40. Rear floor front extension

## BODY COMPONENT PARTS

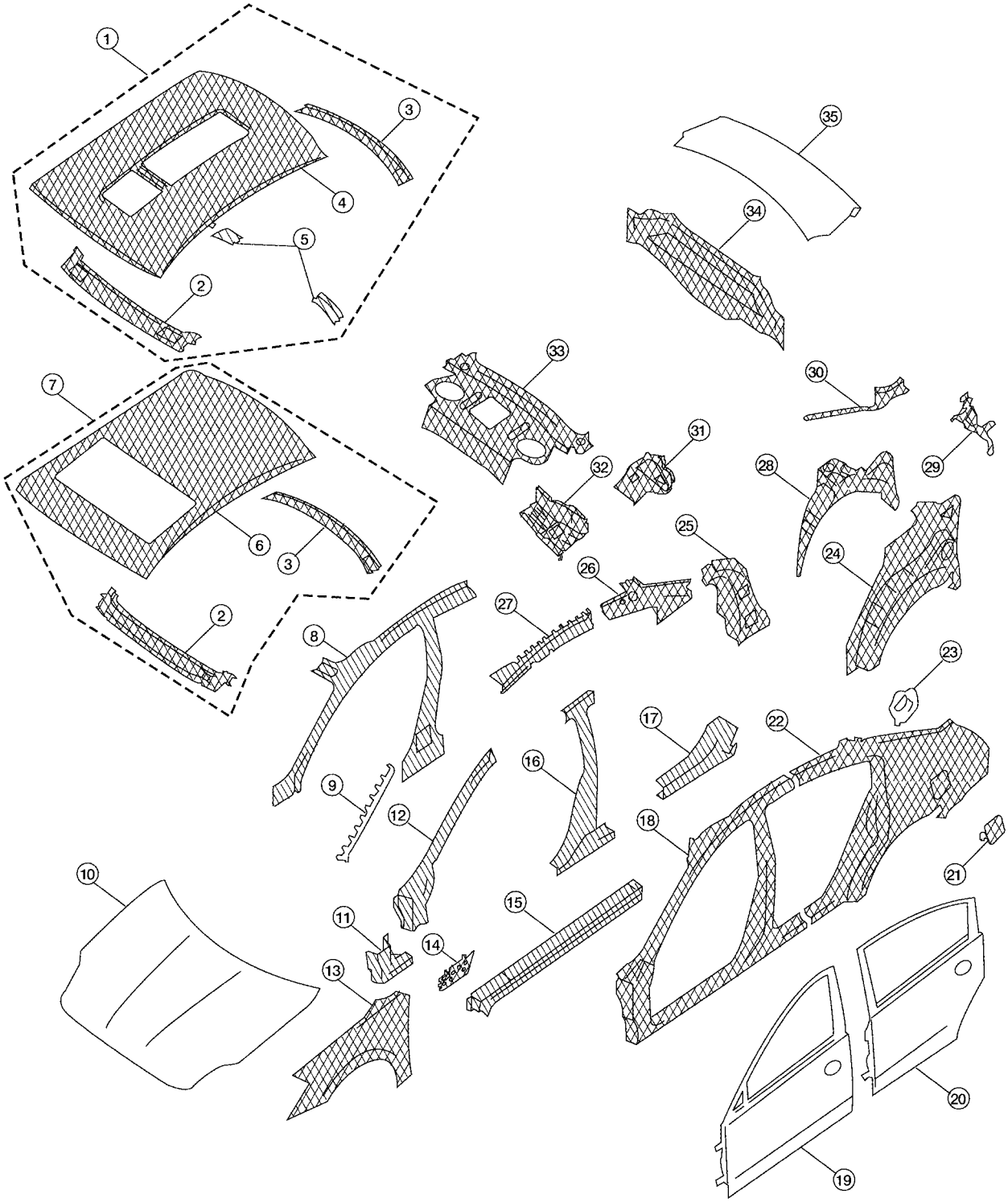


: Indicates both-side anti-corrosive precoated steel portions

: Indicates high strength steel (HSS) portions

: Indicates both-side anti-corrosive precoated steel and (HSS) portions

LIIA1832E

1. Skyview roof assembly
2. Front roof rail assembly
3. Rear roof rail assembly
4. Skyview roof panel
5. 2nd roof bow bracket RH/LH
6. Sunroof roof panel
7. Sunroof assembly
8. Body side inner assembly RH/LH
9. Front pillar outer reinforcement RH/LH
10. Hood assembly
11. Front pillar lower hinge brace RH/LH
12. Front pillar upper hinge brace RH/LH
13. Fender RH/LH
14. Front pillar lower reinforcement RH/LH
15. Outer sill reinforcement assembly RH/LH
16. Center pillar reinforcement RH/LH
17. Rear sill outer reinforcement RH/LH
18. Front body side outer RH/LH
19. Front door assembly RH/LH
20. Rear door assembly RH/LH
21. Fuel filler assembly
22. rear body side outer RH/LH
23. Fuel filler base
24. Rear wheel outer RH/LH
25. Rear pillar inner reinforcement RH/LH
26. Rear pillar inner RH/LH
27. Outer roof side rail reinforcement RH/LH
28. Rear wheel inner RH/LH
29. Rear fender corner assembly RH/LH
30. Rear fender extension RH/LH
31. Parcel shelf side assembly RH/LH
32. Rear wheel inner, inner reinforcement RH/LH
33. Parcel shelf assembly
34. Rear panel assembly
35. Trunk lid assembly

## Corrosion Protection

EIS00472

### DESCRIPTION

To provide improved corrosion prevention, the following anti-corrosive measures have been implemented in NISSAN production plants. When repairing or replacing body panels, it is necessary to use the same anti-corrosive measures.

#### ANTI-CORROSIVE PRECOATED STEEL (GALVANNEALED STEEL)

To improve repairability and corrosion resistance, a new type of anti-corrosive precoated steel sheet has been adopted replacing conventional zinc-coated steel sheet.
Galvannealed steel is electroplated and heated to form Zinc-iron alloy, which provides excellent and long term corrosion resistance with cationic electrode position primer.

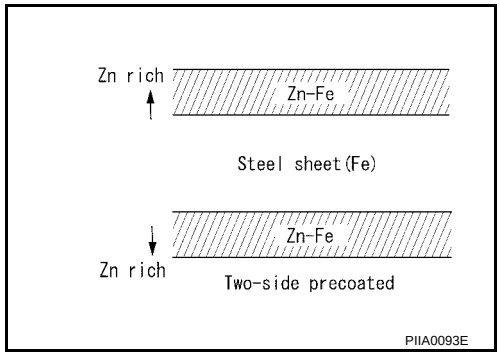


Nissan Genuine Service Parts are fabricated from galvannealed steel. Therefore, it is recommended that GENUINE NISSAN PARTS or equivalent be used for panel replacement to maintain the anti-corrosive performance built into the vehicle at the factory.

#### PHOSPHATE COATING TREATMENT AND CATIONIC ELECTRODEPOSITION PRIMER

A phosphate coating treatment and a cationic electrode position primer, which provide excellent corrosion protection, are employed on all body components.

**CAUTION:**

**Confine paint removal during welding operations to an absolute minimum.**

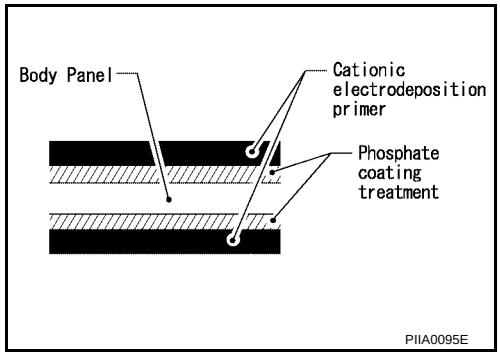


Nissan Genuine Service Parts are also treated in the same manner. Therefore, it is recommended that GENUINE NISSAN PARTS or equivalent be used for panel replacement to maintain anti-corrosive performance built into the vehicle at the factory.

## ANTI-CORROSIVE WAX

To improve corrosion resistance, anti-corrosive wax is applied inside the body sill and inside other closed sections. Accordingly, when replacing these parts, be sure to apply anti-corrosive wax to the appropriate areas of the new parts. Select an excellent anti-corrosive wax which will penetrate after application and has a long shelf life.

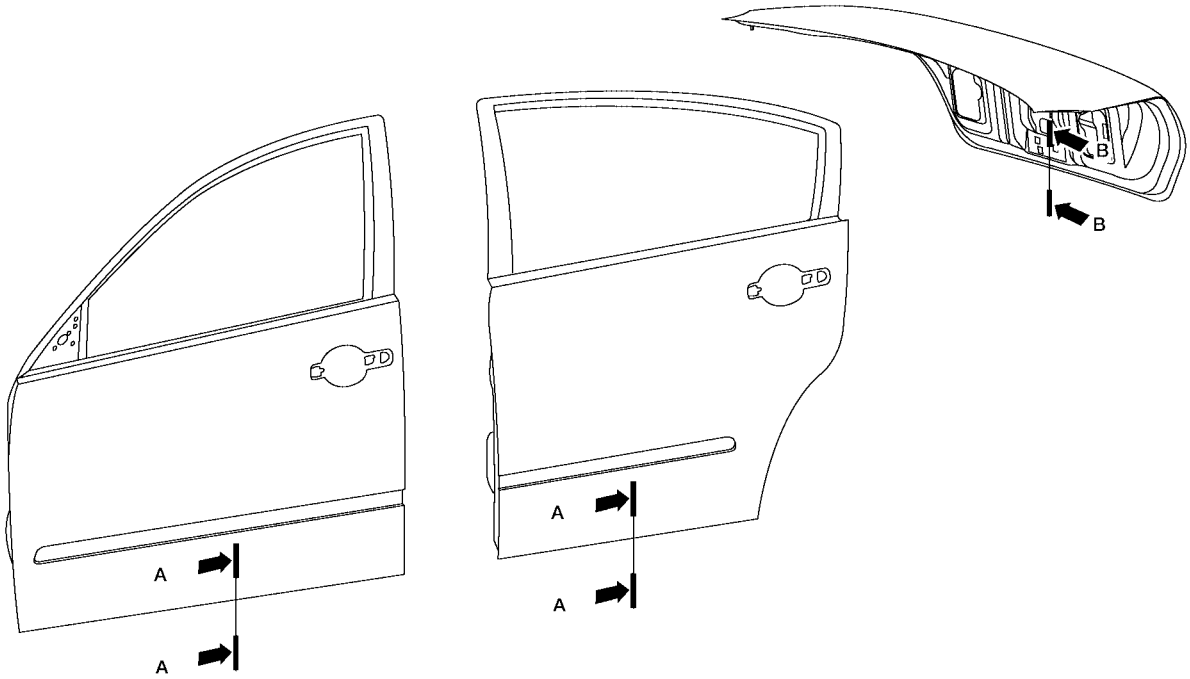


: indicates outside body sealant

: Indicates anti-corrosive wax coated portions

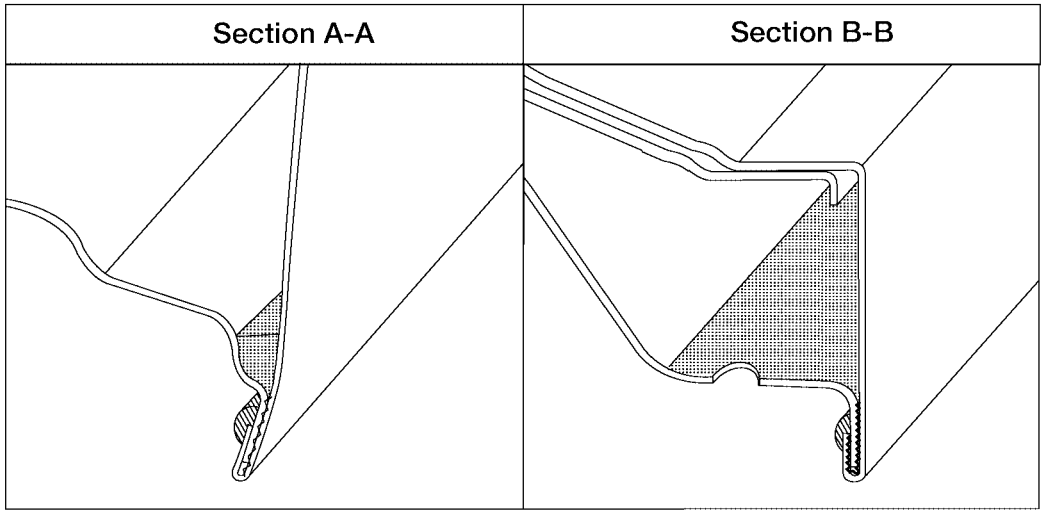


LIIA0266E

## UNDERCOATING

The underside of the floor and wheelhouse are undercoated to prevent rust, vibration, noise and stone chipping. Therefore, when such a panel is replaced or repaired, apply undercoating to that part. Use an undercoating which is rust preventive, soundproof, vibration-proof, shock-resistant, adhesive, and durable.

### Precautions in undercoating

1. Do not apply undercoating to any place unless specified (such as the areas above the muffler and three way catalyst which are subjected to heat).
2. Do not undercoat the exhaust pipe or other parts which become hot.
3. Do not undercoat rotating parts.
4. Apply bitumen wax after applying undercoating.

: Indicates undercoated portions.

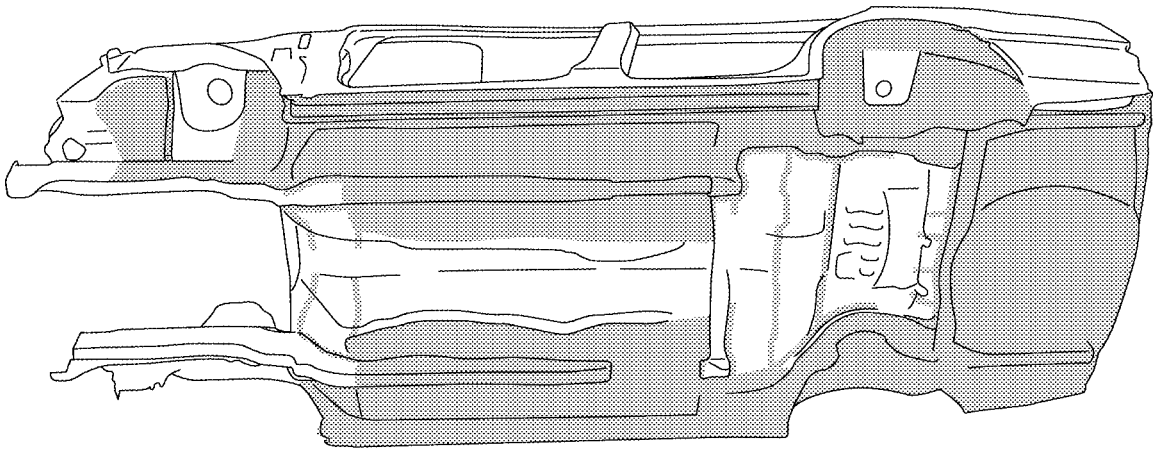

LIIA0129E

## Body Sealing

EIS00473

### DESCRIPTION

The following figure shows the areas which are sealed at the factory. Sealant which has been applied to these areas should be smooth and free from cuts or gaps. Care should be taken not to apply an excess amount of sealant and not to allow other unaffected parts to come into contact with the sealant.

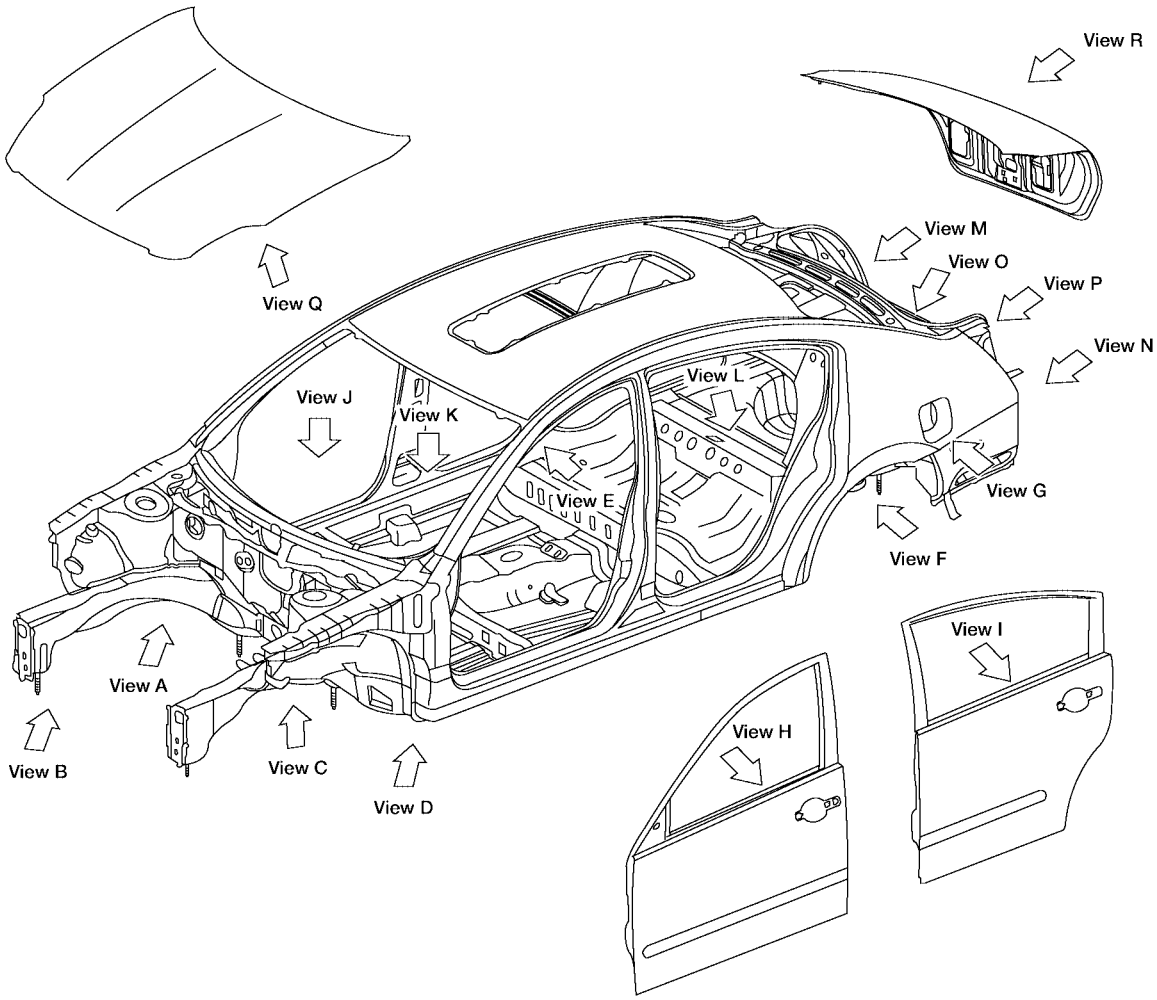


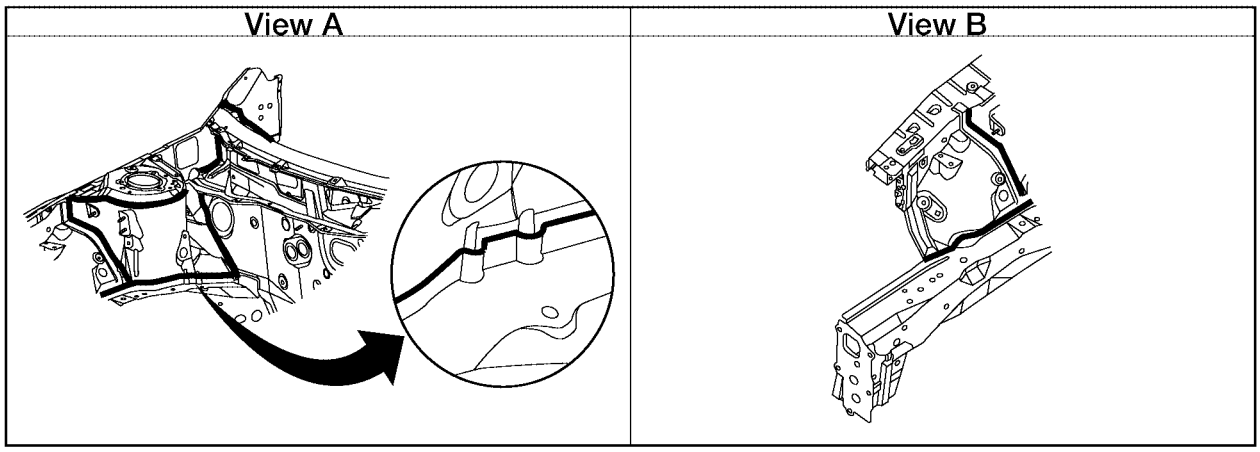


WIIA0383E

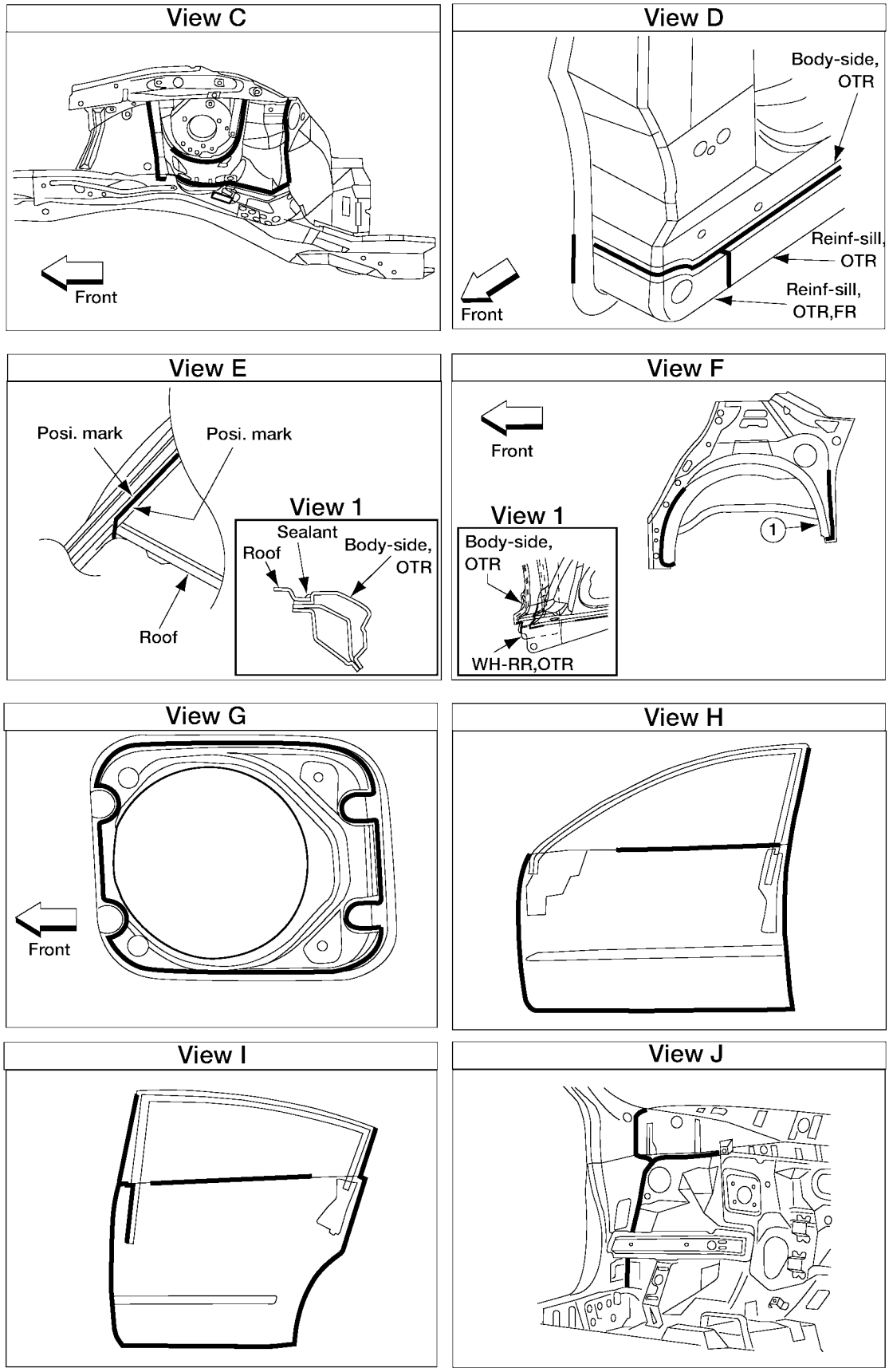
View C
Front
View D
Body-side, OTR
Reinf-sill, OTR
Reinf-sill, OTR,FR
Front
View E
Posi. mark
Posi. mark
Roof
View 1
Sealant
Roof
Body-side, OTR
View F
Front
View 1
Body-side, OTR
WH-RR,OTR
1
View G
Front
View H
View I
View J

WIIA0384E

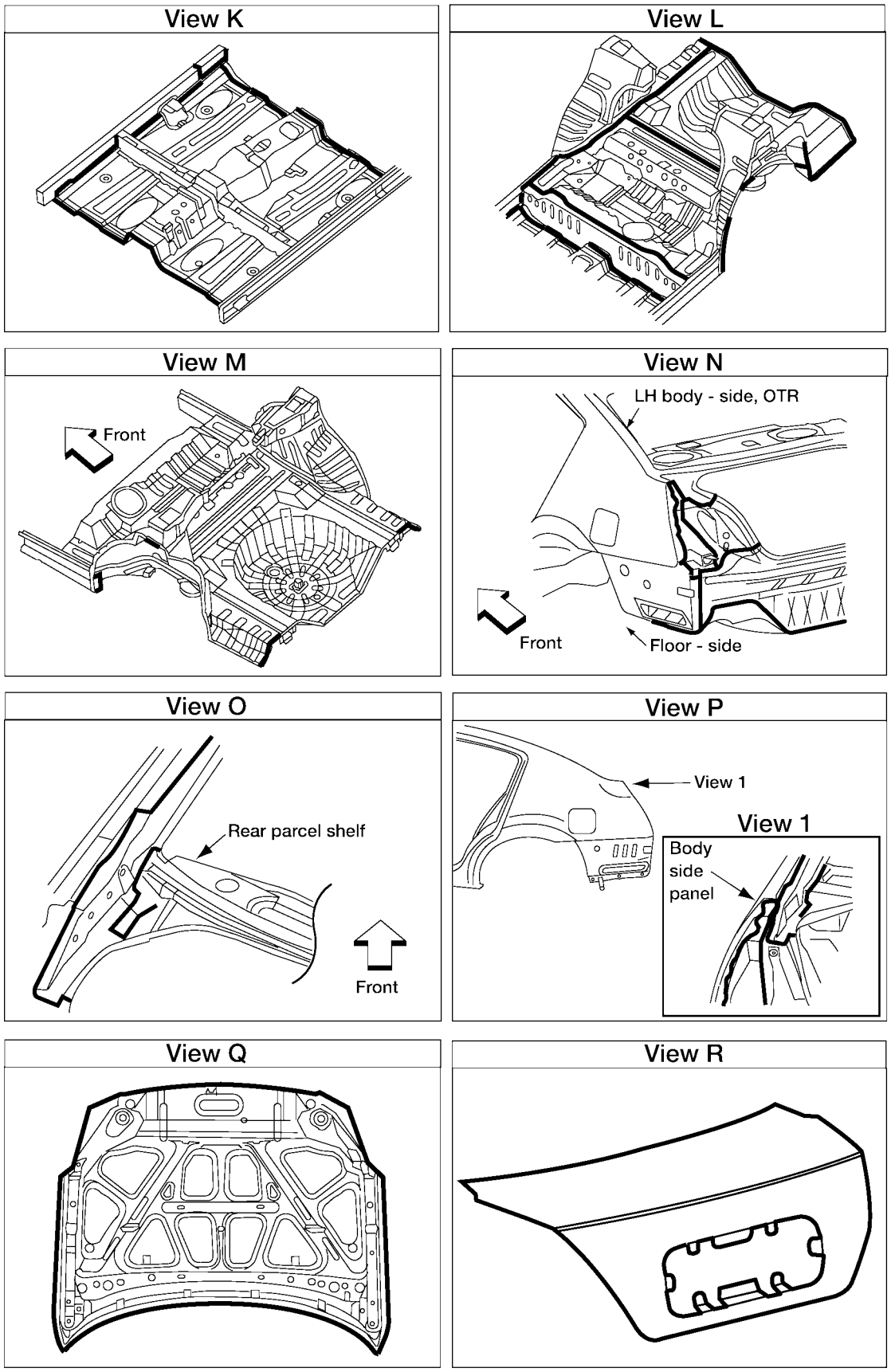
View K
View L
View M
Front
View N
LH body - side, OTR
Front
Floor - side
View O
Rear parcel shelf
Front
View P
View 1
View 1
Body
side
panel
View Q
View R

LIIA0508E

## Body Construction

### BODY CONSTRUCTION

EIS00474

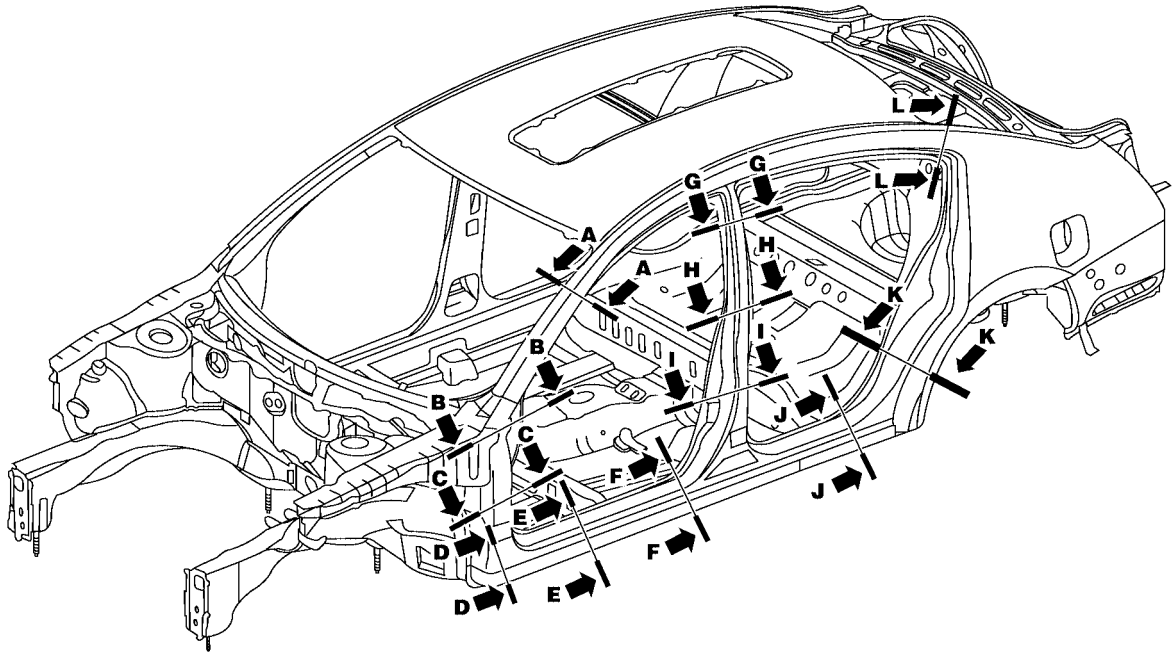


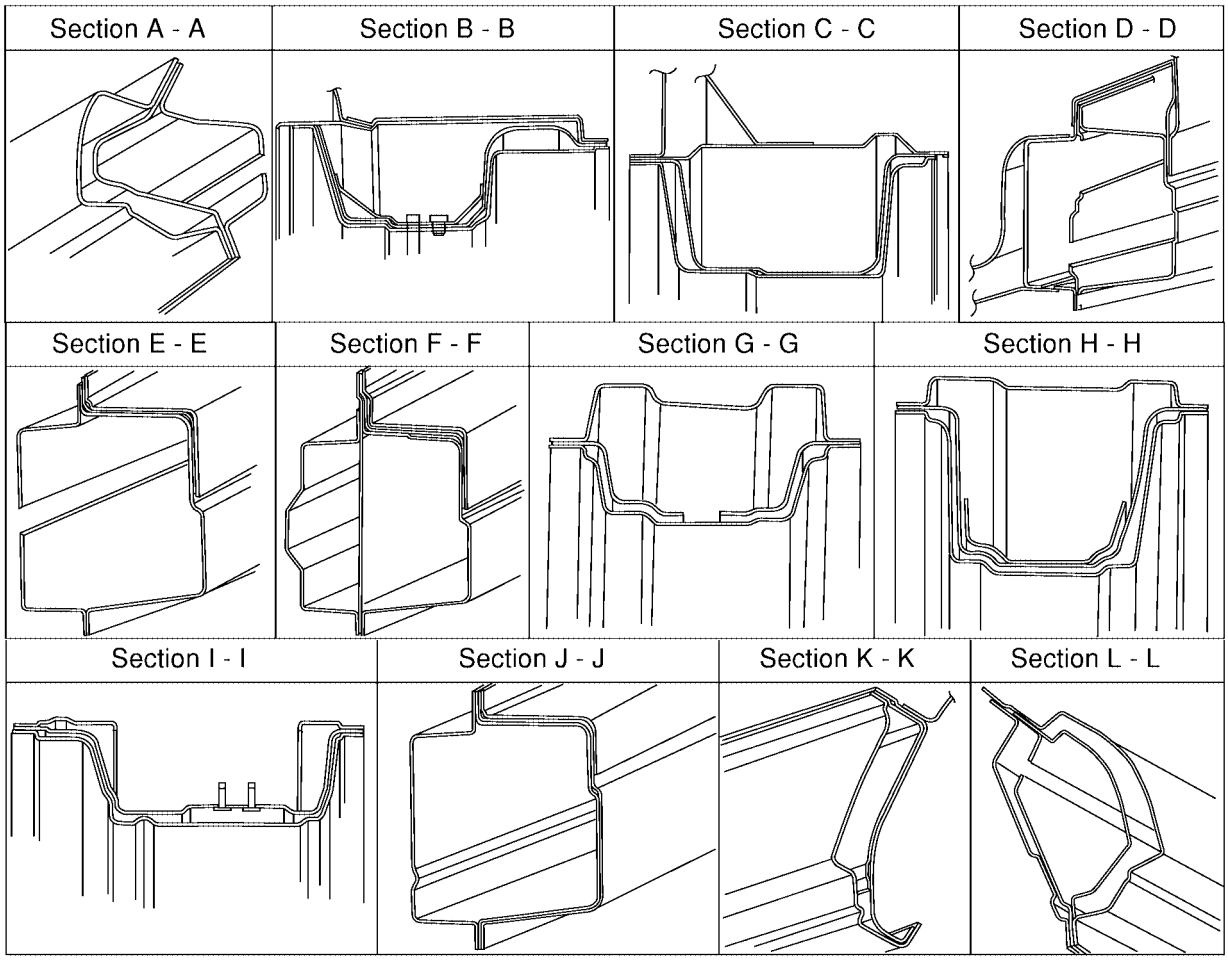


LIIA0509E

## Body Alignment

EIS00475

### BODY CENTER MARKS

A mark has been placed on each part of the body to indicate the vehicle center. When repairing parts damaged by an accident which might affect the vehicle frame (members, pillars, etc.), more accurate and effective repair will be possible by using these marks together with body alignment specifications.

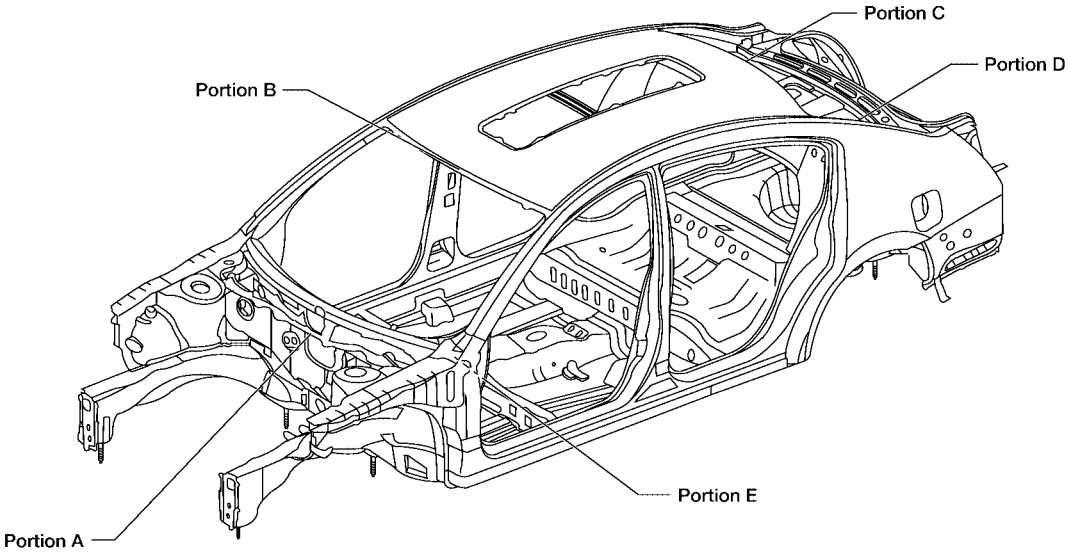


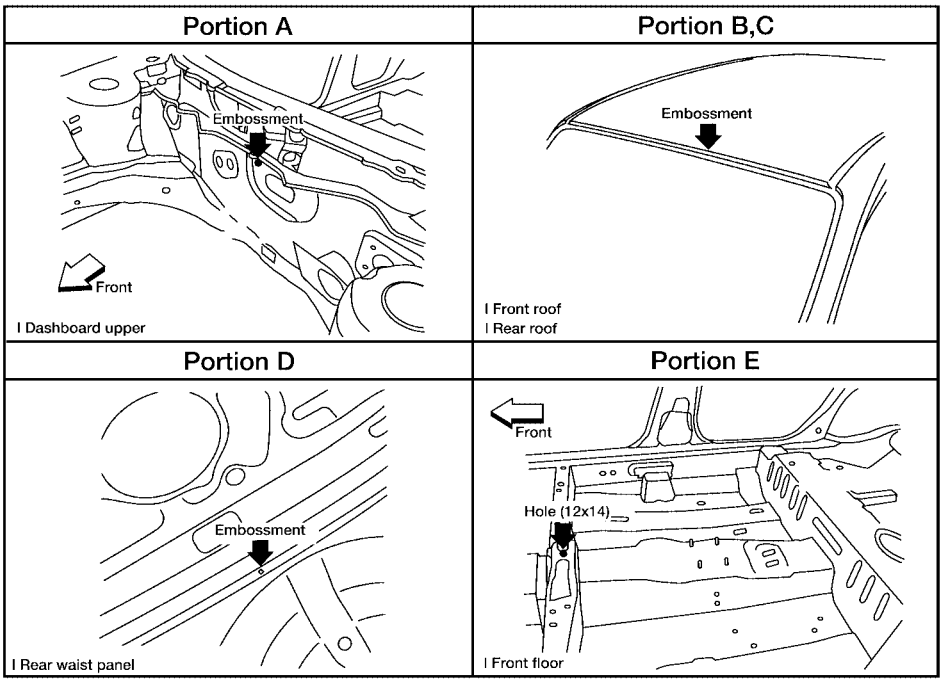


LIIA0510E

## PANEL PARTS MATCHING MARKS

A mark has been placed on each body panel to indicate the parts matching positions. When repairing parts damaged by an accident which might affect the vehicle structure (members, pillars, etc.), more accurate and effective repair will be possible by using these marks together with body alignment specifications.

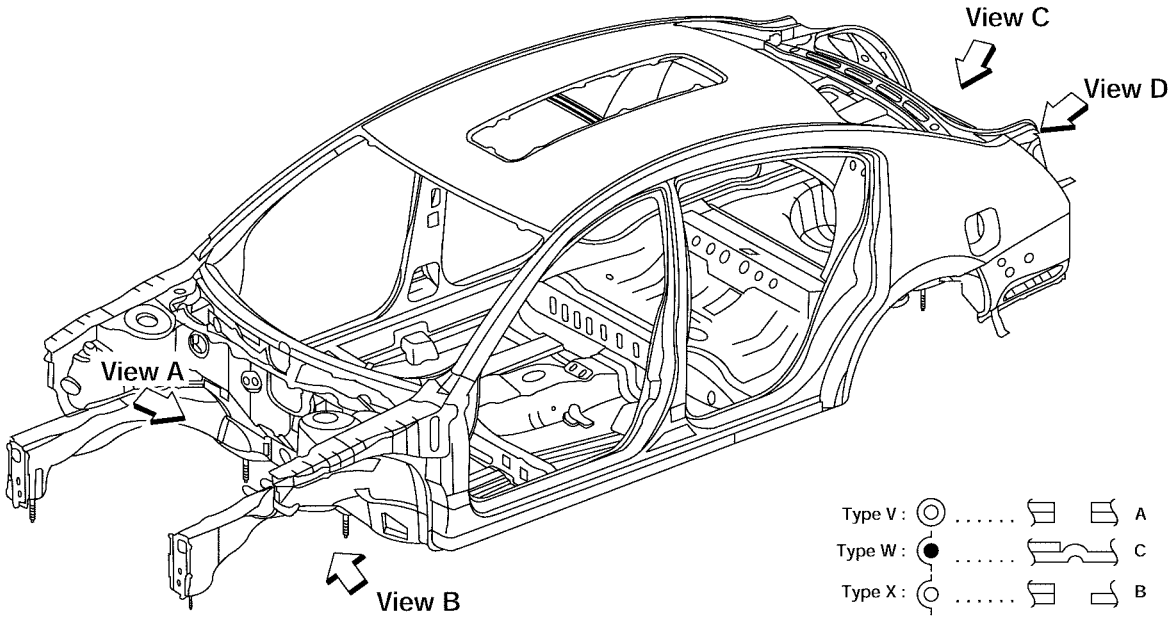


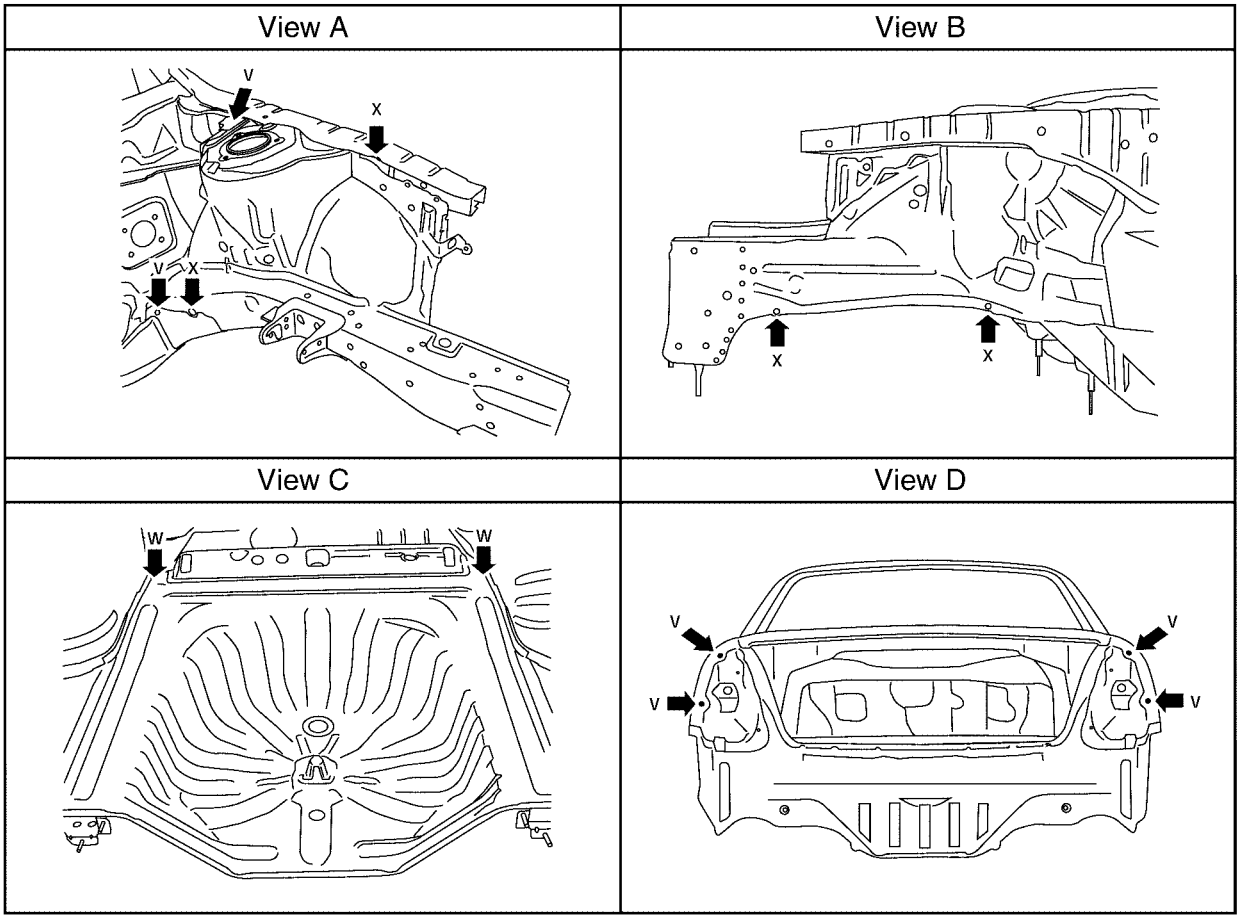


LIIA0511E

## DESCRIPTION

- All dimensions indicated in the figures are actual.
- When using a tracking gauge, adjust both pointers to equal length. Then check the pointers and gauge itself to make sure there is no free play.
- When a measuring tape is used, check to be sure there is no elongation, twisting or bending.
- Measurements should be taken at the center of the mounting holes.
- An asterisk (*) following the value at the measuring point indicates that the measuring point on the other side is symmetrically the same value.
- The coordinates of the measurement points are the distances measured from the standard line of "X", "Y" and "Z".

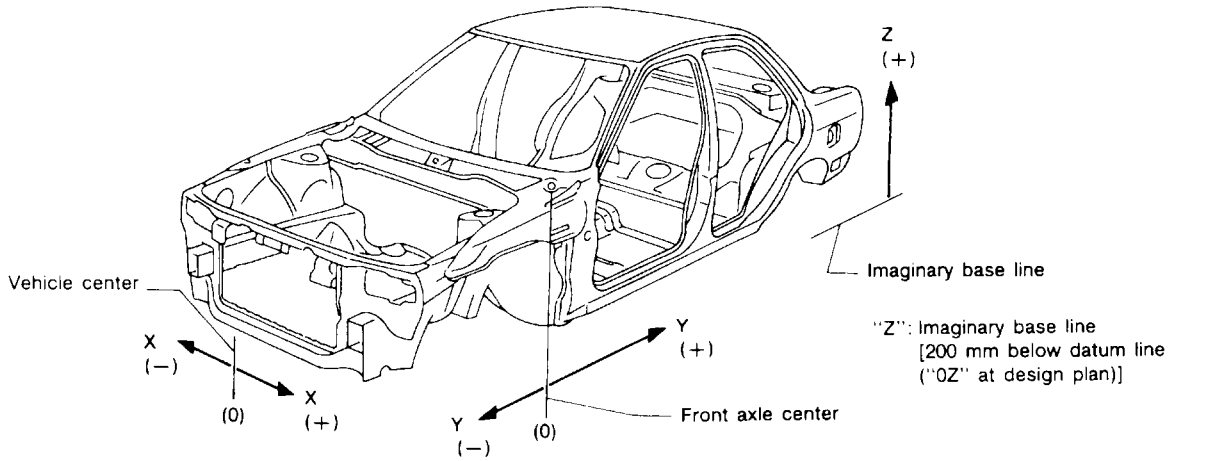


PIIA0104E

## ENGINE COMPARTMENT MEASUREMENT

Figures marked with a (*) indicate symmetrically identical dimensions on both right and left hand sides of the vehicle.

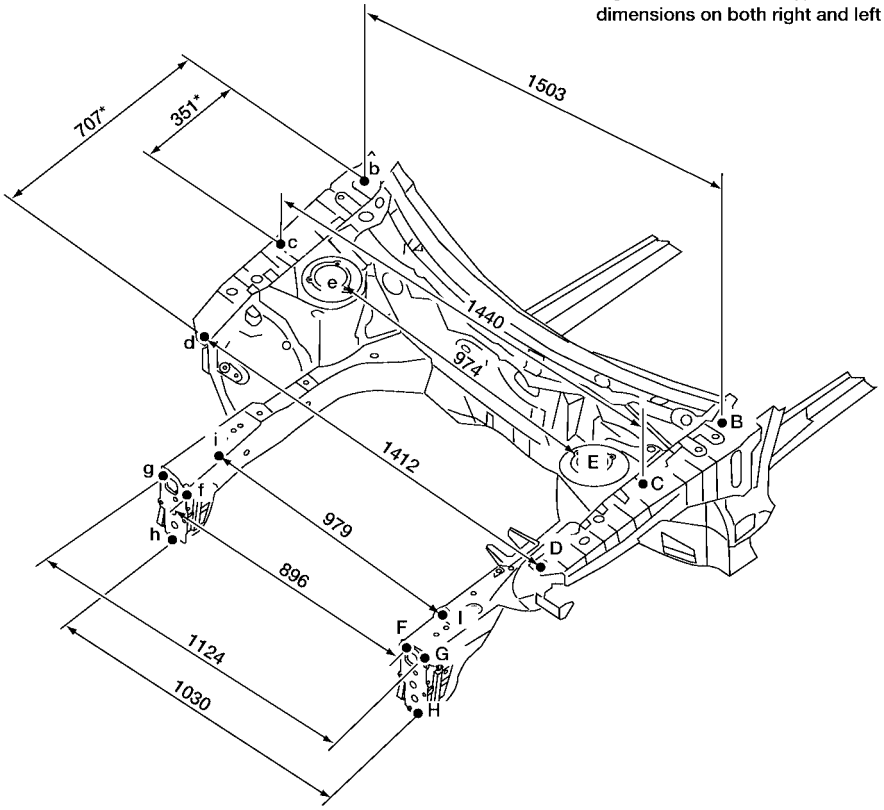


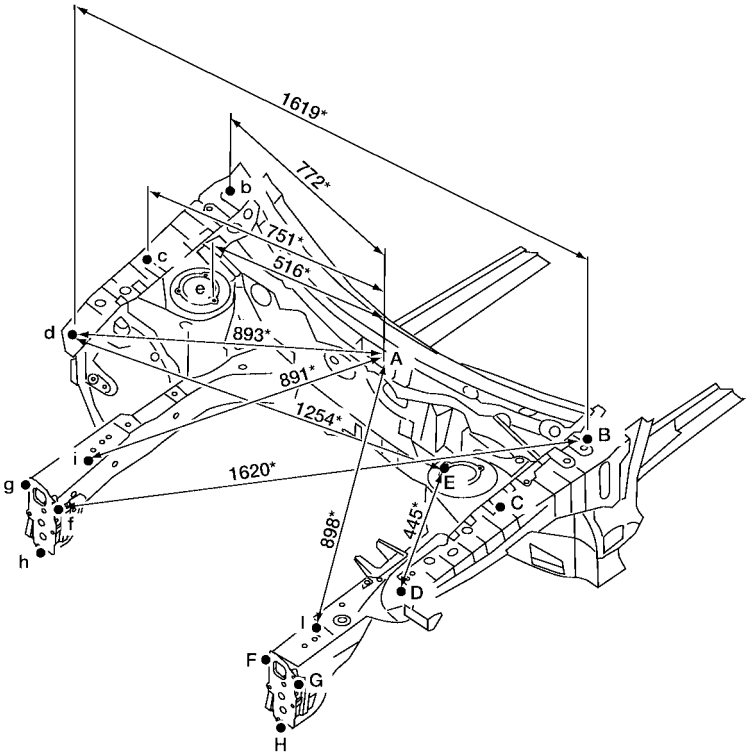


Unit: mm

WIIA0480E

## MEASUREMENT POINTS

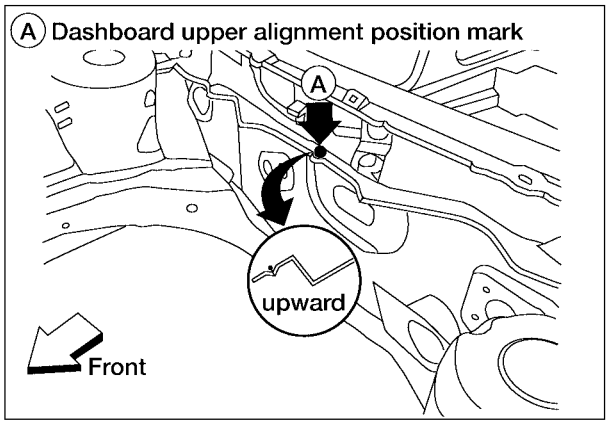


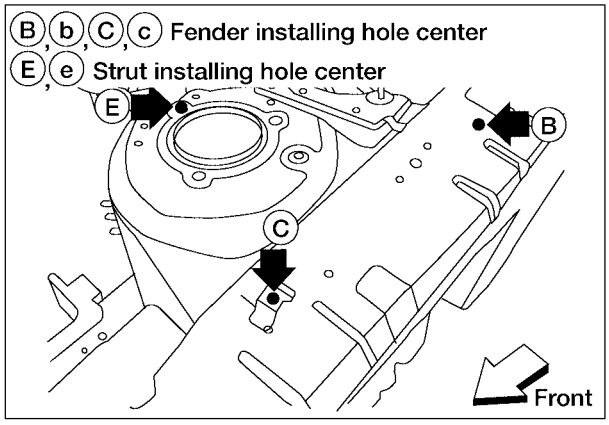


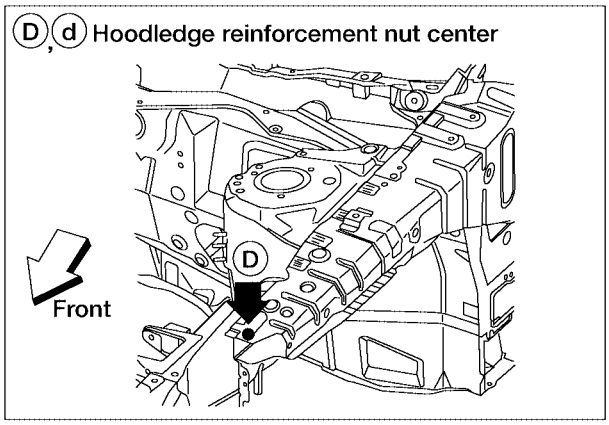


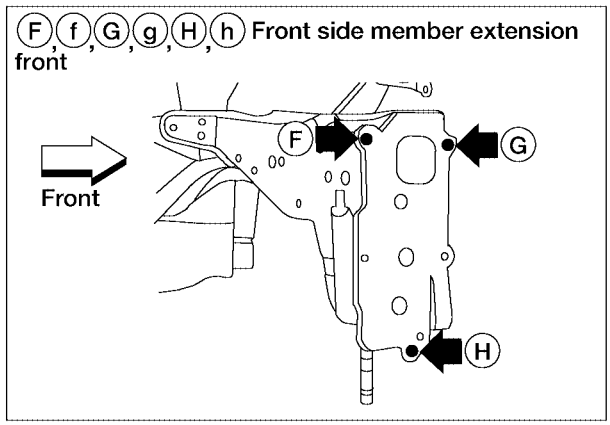


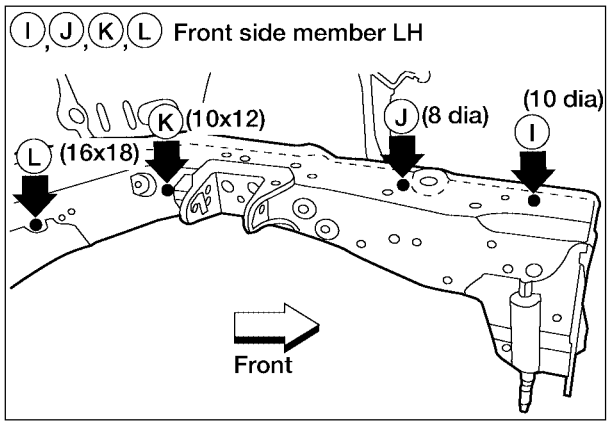


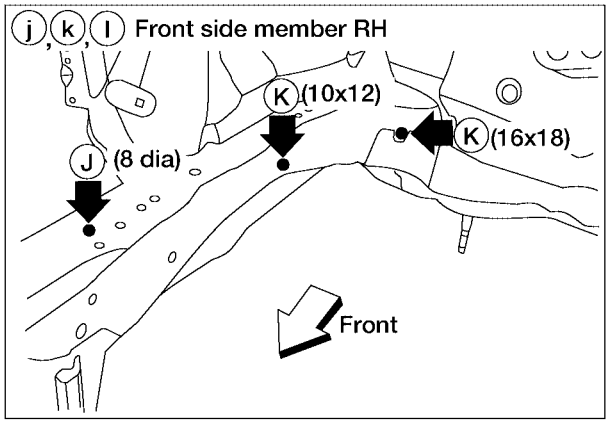


LIIA0551E

## UNDERBODY MEASUREMENT

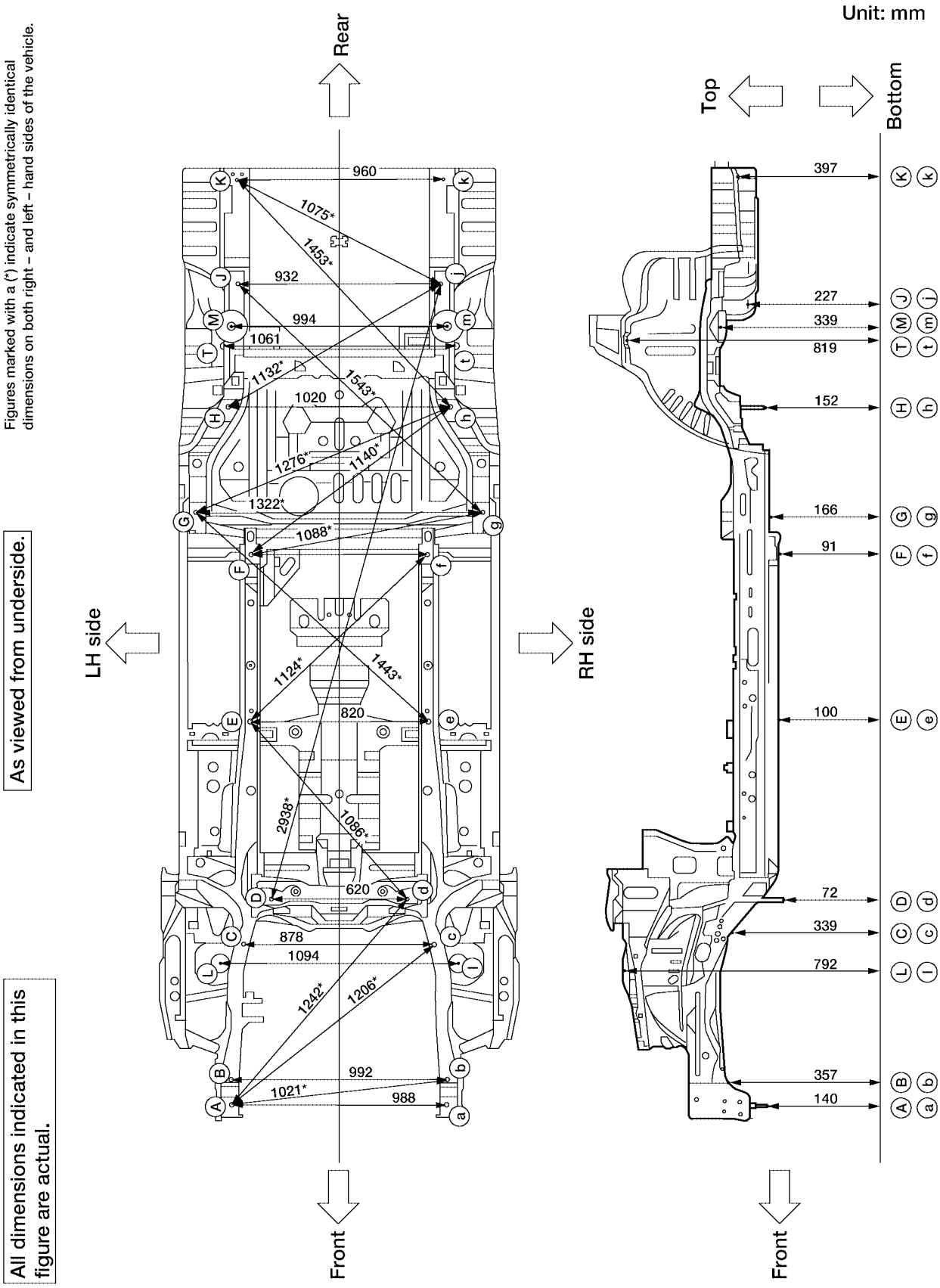

## MEASUREMENT POINTS

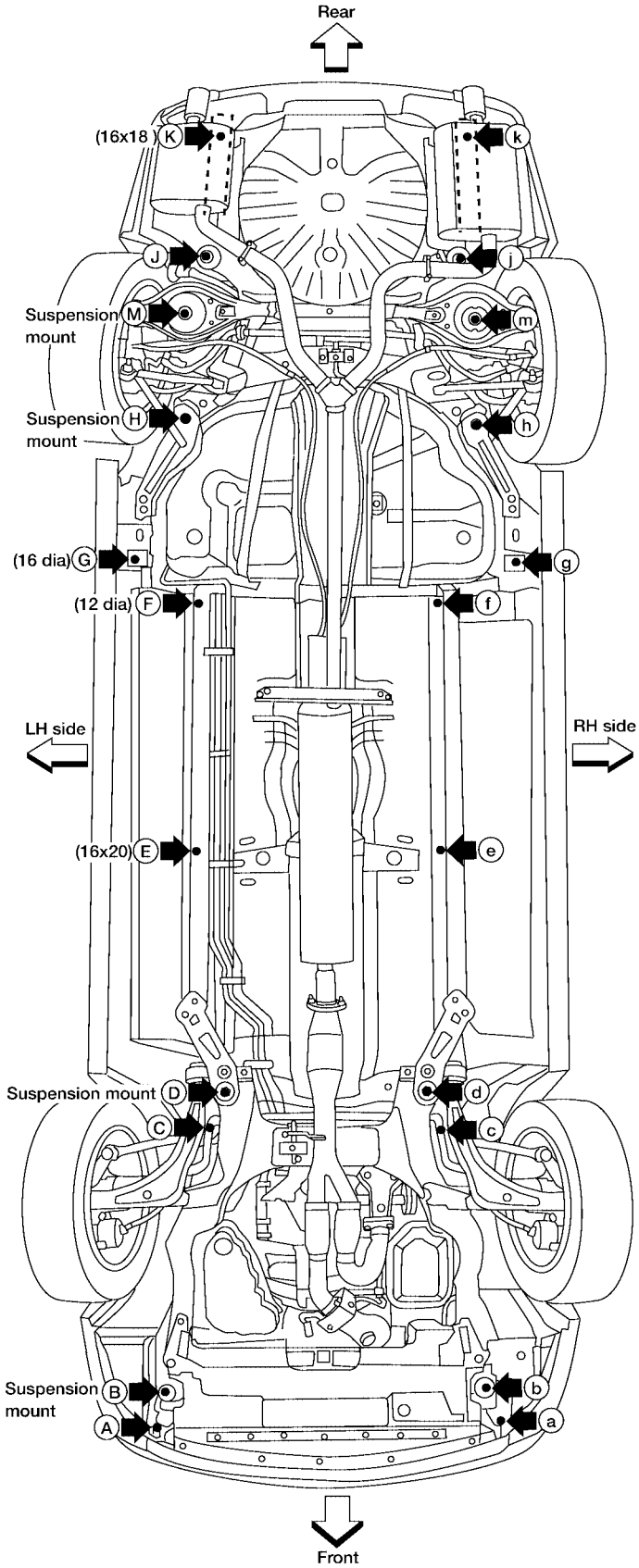


Coordinates:

Ⓐ,ⓐ
X : ±494
Y : -617
Z : 141

Ⓑ,ⓑ
X : ±495
Y : -500
Z : 357

Ⓒ,ⓒ
X : ±438
Y : 122
Z : 339

Ⓓ,ⓓ
X : ±309
Y : 327
Z : 387

Ⓔ,ⓔ
X : ±410
Y : 1140
Z : 100

Ⓕ,ⓕ
X : ±407
Y : 1912
Z : 91

Ⓖ,ⓖ
X : ±661
Y : 2105
Z : 166

Ⓗ,ⓗ
X : ±510
Y : 2587
Z : 152

Ⓜ,ⓜ
X : ±497
Y : 2961
Z : 338

Ⓙ,ⓙ
X : ±465
Y : 3157
Z : 226

Ⓚ,ⓚ
X : ±479
Y : 3636
Z : 397

Strut tower centers

Coordinates:

Ⓛ,ⓛ Front
X : ±547
Y : 28
Z : 791

Ⓣ,ⓣ Rear
X : ±530
Y : 2857
Z : 817

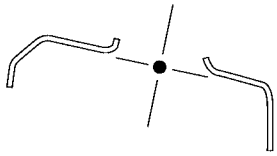

Unit: mm

WIIA0488E

## PASSENGER COMPARTMENT MEASUREMENT

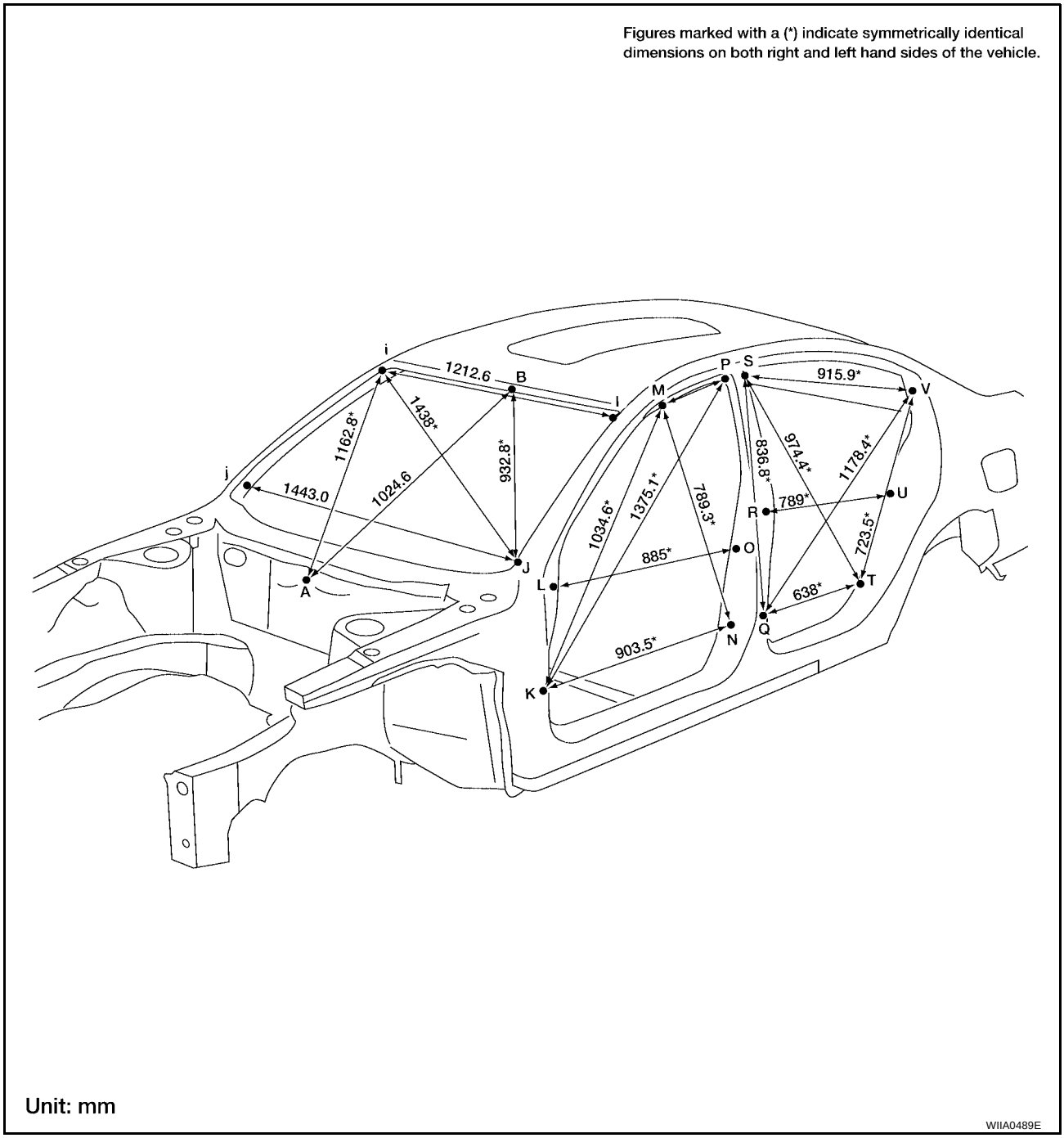

## MEASUREMENT POINTS

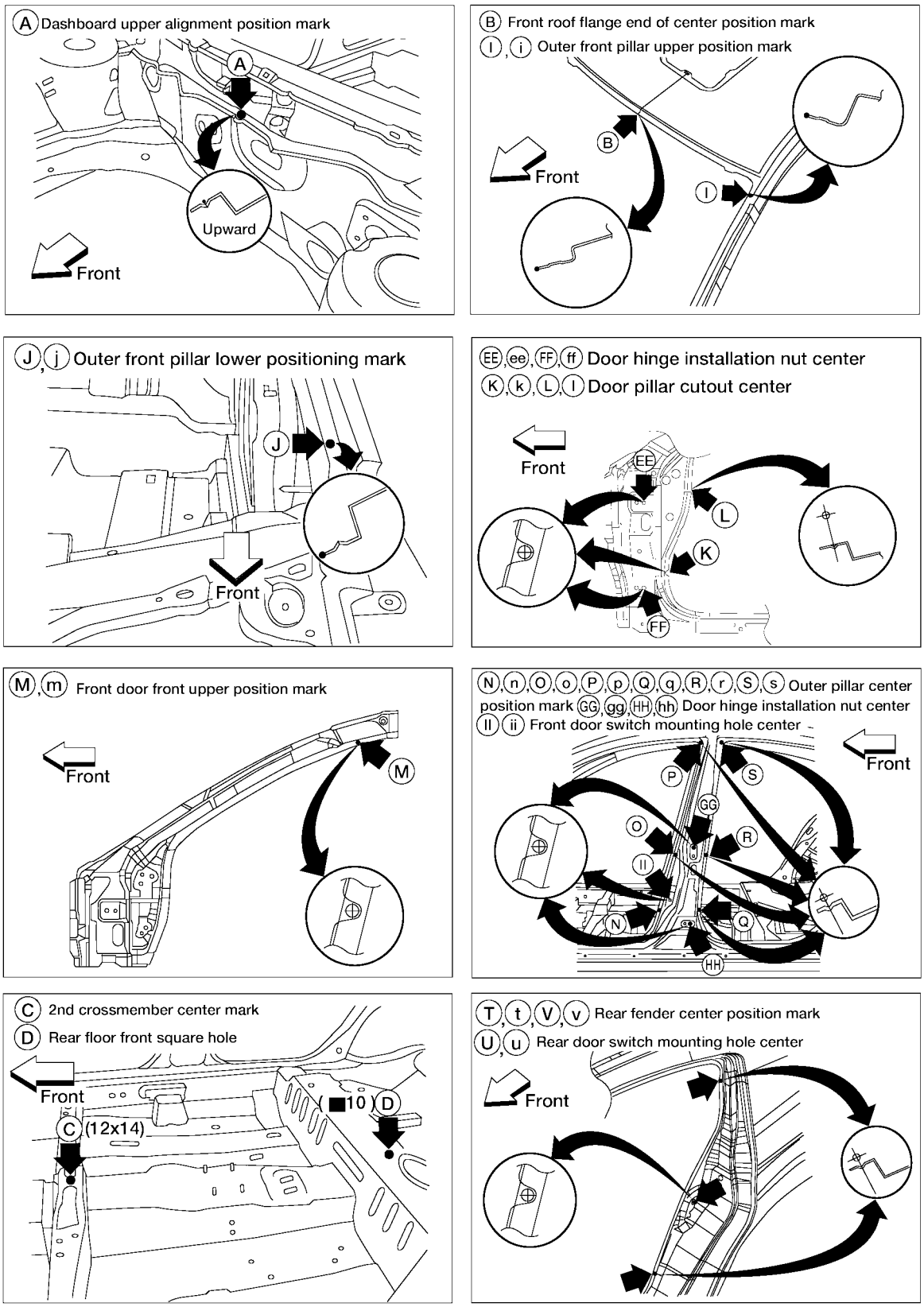


LIIA0555E

## REAR BODY MEASUREMENT

Figures marked with a (*) indicate symmetrically identical dimensions on both right and left hand sides of the vehicle.

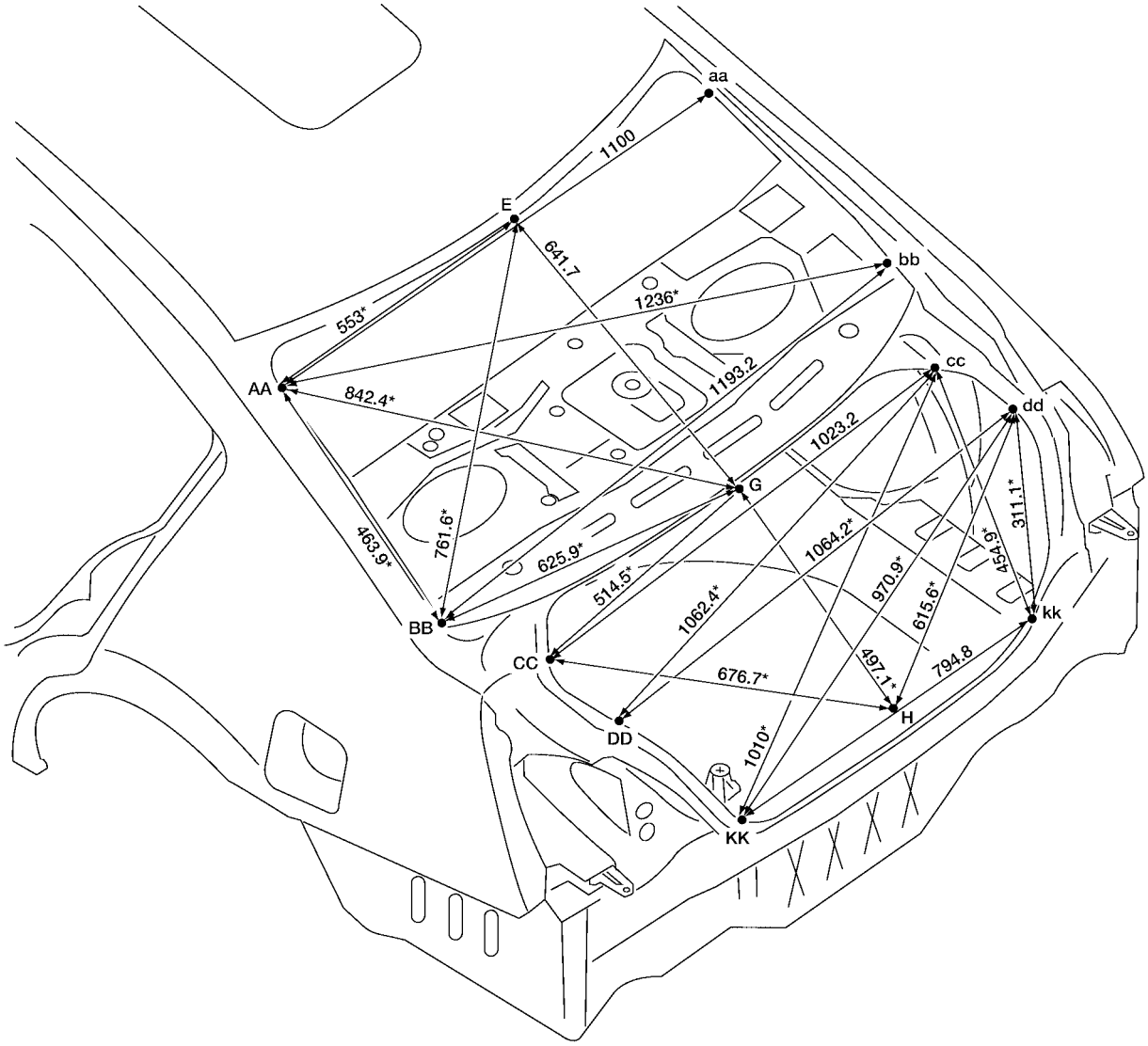


Unit: mm

WIIA0490E

## MEASUREMENT POINTS

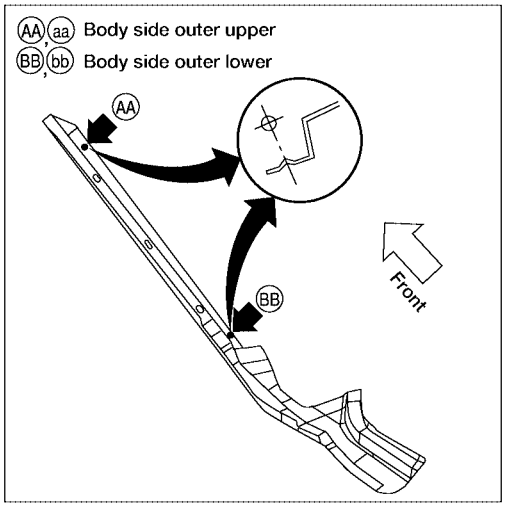


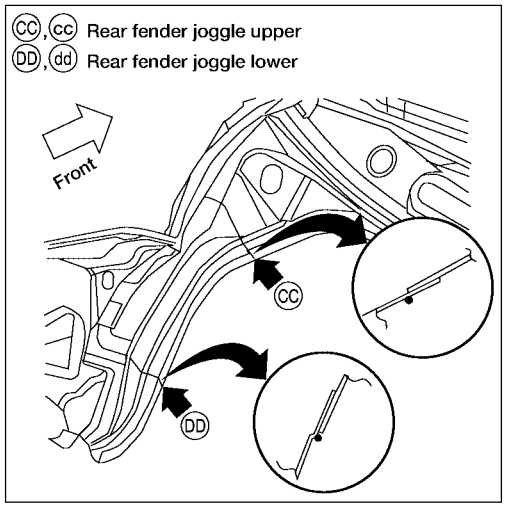


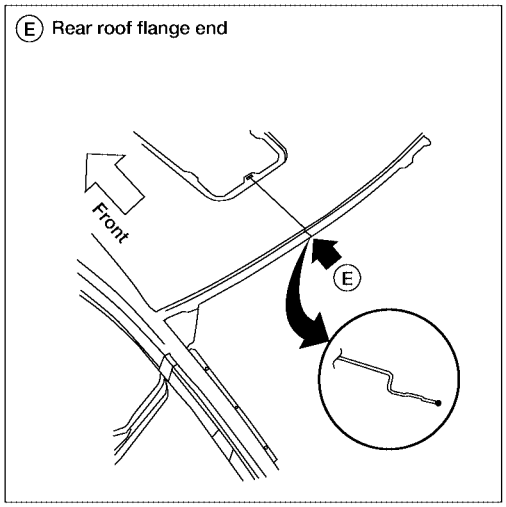


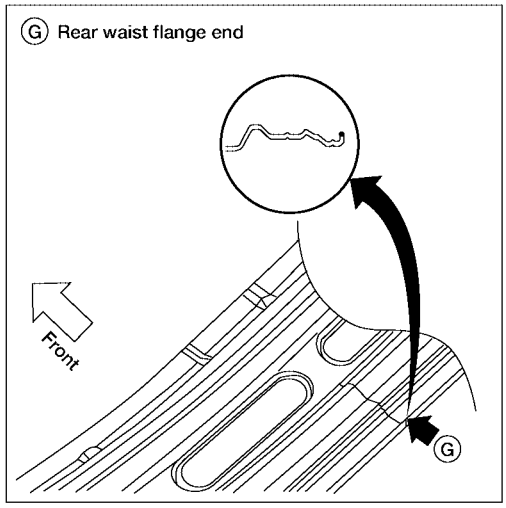


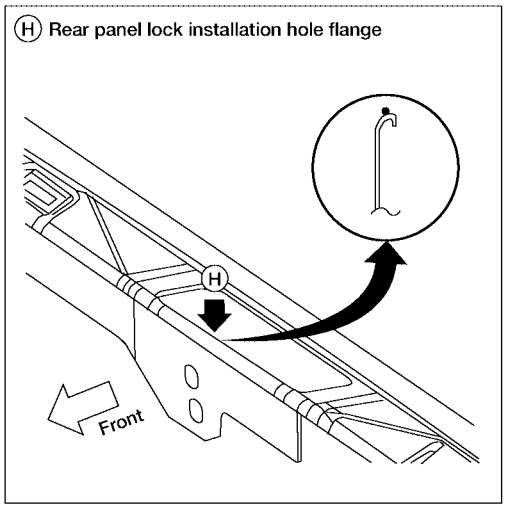


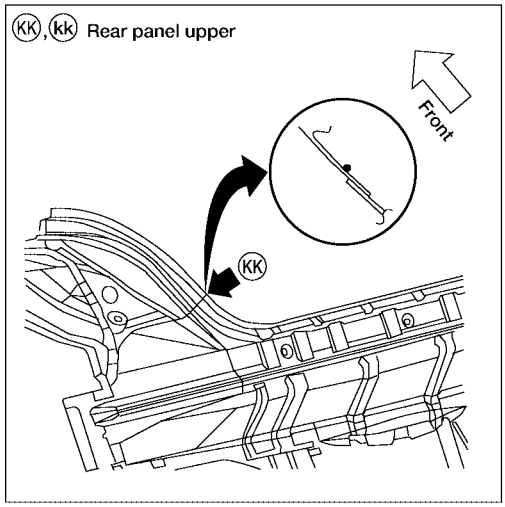


LIIA0554E

## Handling Precautions for Plastics

EIS00476

### HANDLING PRECAUTIONS FOR PLASTICS

| Abbre-viation | Material name | Heat resisting temperature °C (°F) | Resistance to gasoline and solvents | Other cautions |
|---|---|---|---|---|
| PE | Polyethylene | 60 (140) | Gasoline and most solvents are harmless if applied for a very short time (wipe up quickly). | Flammable |
| PVC | Polyvinyl Chloride | 80 (176) | Same as above. | Poison gas is emitted when burned. |
| EPM/ EPDM | Ethylene Propylene (Diene) rub-ber | 80 (176) | Same as above. | Flammable |
| TPO/ TPR | Thermoplastic Olefine/ Thermoplastic Rubber | 80 (176) | Same as above. | Flammable |
| PP | Polypropylene | 90 (194) | Same as above. | Flammable, avoid bat-tery acid. |
| UP | Polyester thermoset | 90 (194) | Same as above. | Flammable |
| PS | Polystyrene | 80 (176) | Avoid solvents. | Flammable |
| ABS | Acrylonitrile Butadiene Styrene resin | 80 (176) | Avoid gasoline and solvents. | |
| AES | Acrylonitrile Ethylene Styrene | 80 (176) | Same as above. | |
| PMMA | Polymethyl Methacrylate | 85 (185) | Same as above. | |
| AAS | Acrylonitrile Acrylic Styrene | 85 (185) | Same as above. | |
| AS | Acrylonitrile Styrene | 85 (185) | Same as above. | |
| EVA | Polyvinyl Ethyl Acetate | 90 (194) | Same as above. | |
| ASA | Acrylonitrile Styrene Acrylate | 100 (222) | Same as above. | Flammable |
| PPO/ PPE | Polyphenylene Oxide/ Polyphenylene Ether | 110 (230) | Same as above. | |
| PC | Polycarbonate | 120 (248) | Same as above. | |
| PAR | Polyacrylate | 180 (356) | Same as above. | |
| L-LDPE | Lenear Low Density PE | 45 (100) | Gasoline and most solvents are harmless. | Flammable |
| PUR | Polyurethane | 90 (194) | Same as above. | |
| TPU | Thermoplastic Urethane | 110 (230) | Same as above. | |
| PPC | Polypropylene Composite | 115 (239) | Same as above. | Flammable |
| POM | Polyacetal | 120 (248) | Same as above. | Avoid battery acid. |
| PBT+PC | Polybutylene Terephtha-late+Polycarbonate | 120 (248) | Same as above. | Flammable |
| PA | Polyamide (Nylon) | 140 (284) | Same as above. | Avoid immersing in wa-ter. |
| PBT | Polybutylene Terephthalate | 140 (284) | Same as above. | |
| FRP | Fiber Reinforced Plastics | 170 (338) | Same as above. | Avoid battery acid. |
| PET | Polyethylene Terephthalate | 180 (356) | Same as above. | |
| PEI | Polyetherimide | 200 (392) | Same as above. | |

1. When repairing and painting a portion of the body adjacent to plastic parts, consider their characteristics (influence of heat and solvent) and remove them if necessary or take suitable measures to protect them.
2. Plastic parts should be repaired and painted using methods suiting the materials' characteristics.

## LOCATION OF PLASTIC PARTS

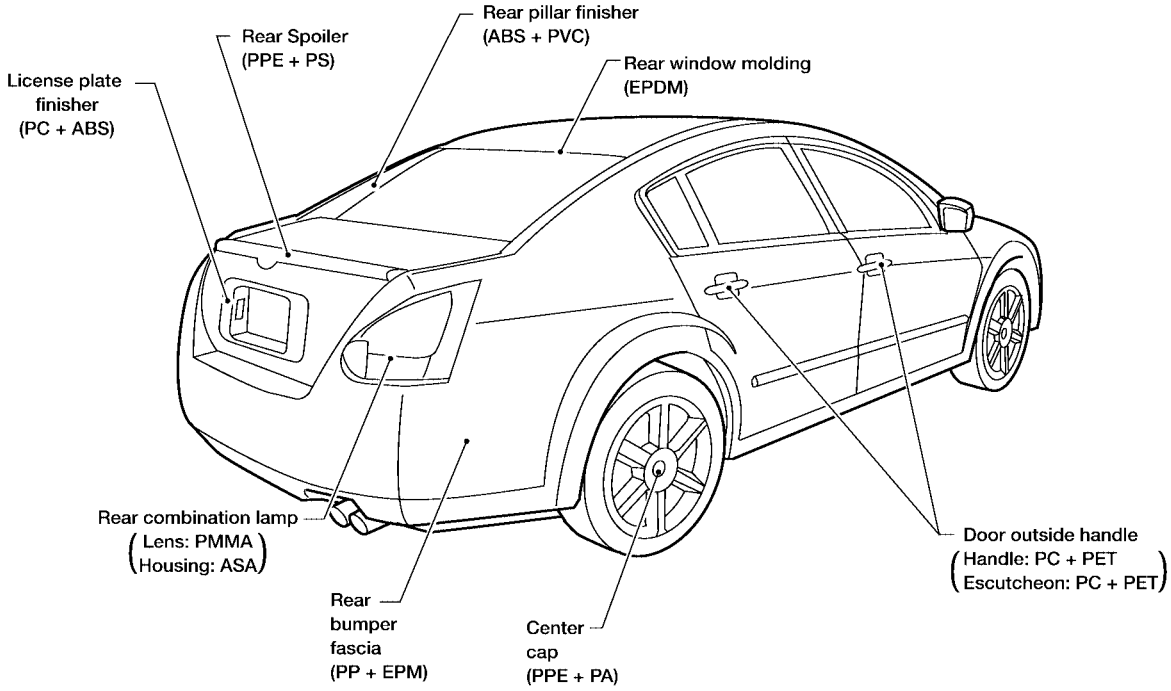


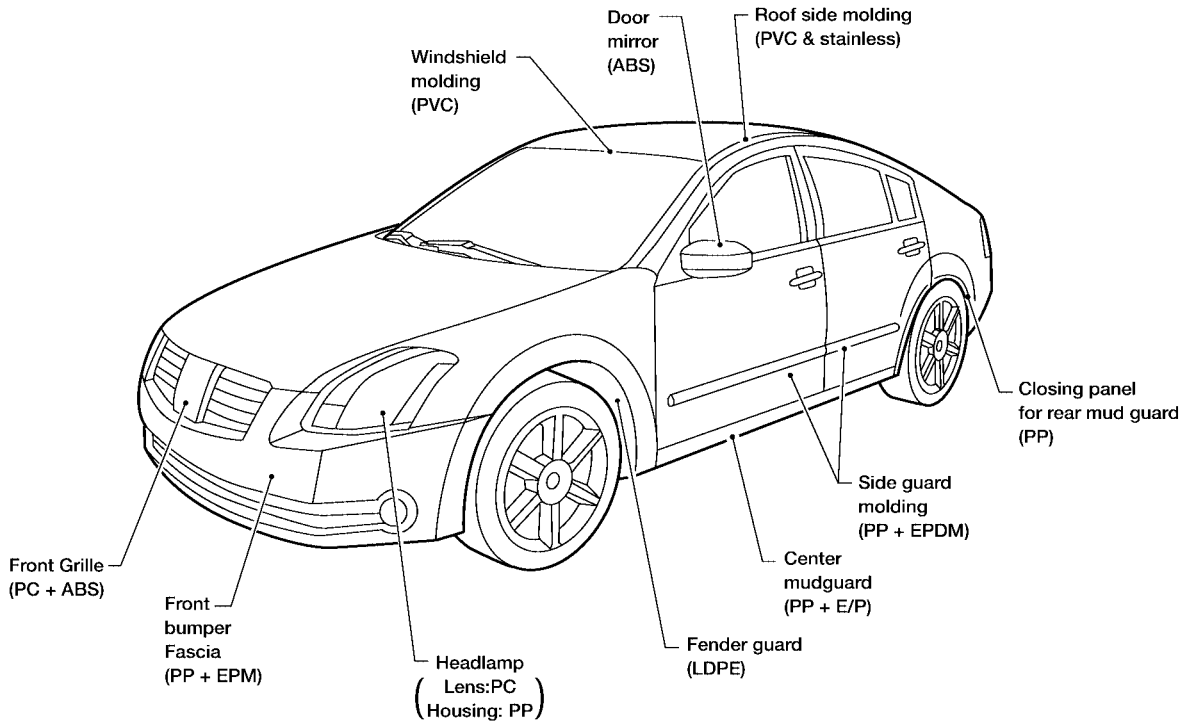


LIIA0517E

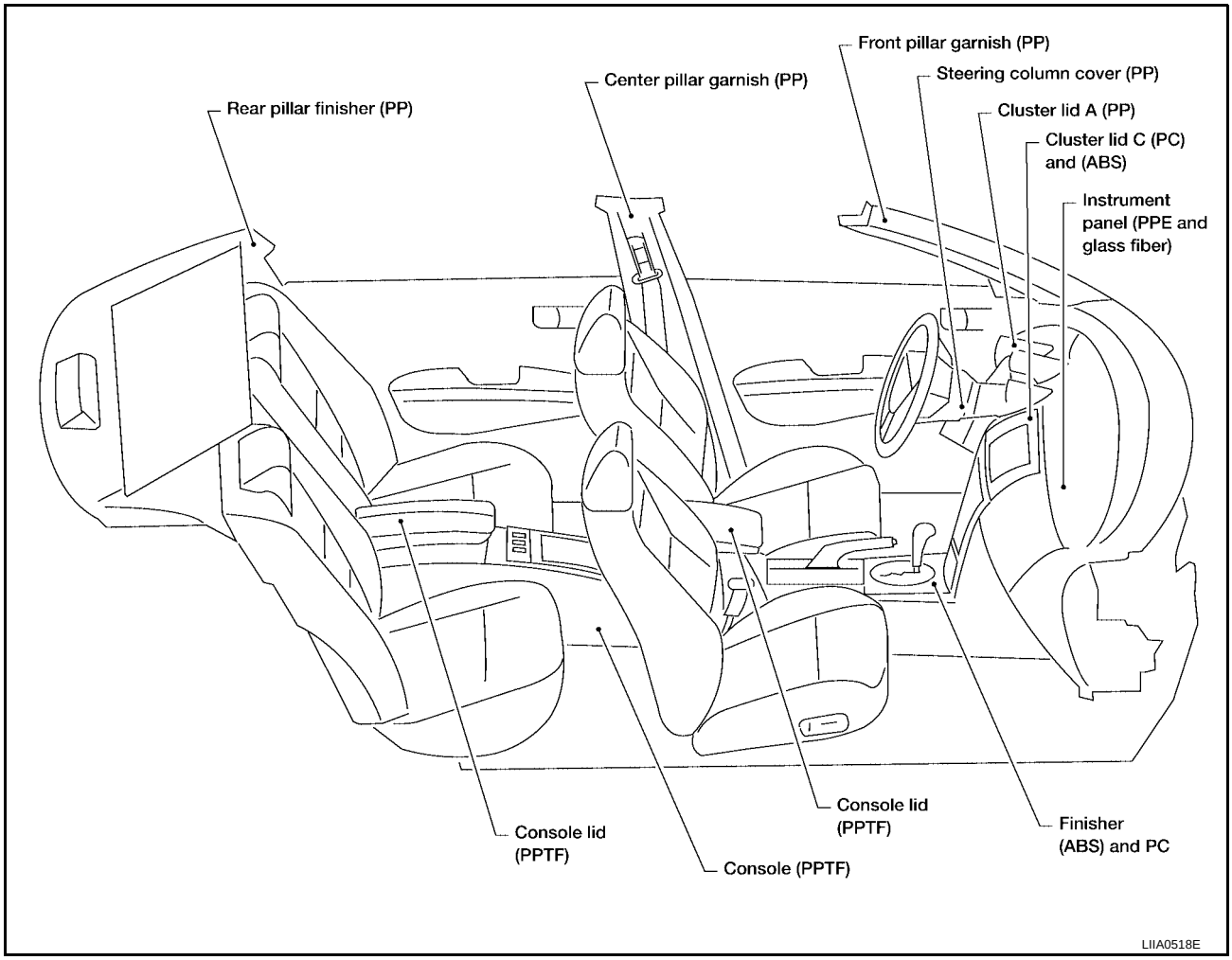
Front pillar garnish (PP)
Center pillar garnish (PP)
Steering column cover (PP)
Rear pillar finisher (PP)
Cluster lid A (PP)
Cluster lid C (PC) and (ABS)
Instrument panel (PPE and glass fiber)
Console lid (PPTF)
Console lid (PPTF)
Console (PPTF)
Finisher (ABS) and PC
LIIA0518E

## Precautions in Repairing High Strength Steel

EIS00477

High strength steel is used for body panels in order to reduce vehicle weight.
Accordingly, precautions in repairing automotive bodies made of high strength steel are described below:

### HIGH STRENGTH STEEL (HSS) USED IN NISSAN VEHICLES

| Tensile strength | Nissan/Infiniti designation | Major applicable parts |
|---|---|---|
| 373 N/mm$^2$ (38kg/mm$^2$ ,54klb/sq in) | SP130 | ● Front side member assembly<br>● Upper hoodledge<br>● Upper pillar hinge brace assembly<br>● Rear side member extension<br>● Other reinforcements |
| 785-981 N/mm$^2$ (80-100kg/mm$^2$ 114-142klb/sq in) | SP150 | ● Front bumper reinforcement<br>● Rear bumper reinforcement |

SP130 is the most commonly used HSS.
SP150 HSS is used only on parts that require much more strength.

Read the following precautions when repairing HSS:

1. Additional points to consider
   - The repair of reinforcements (such as side members) by heating is not recommended since it may weaken the component. When heating is unavoidable, do not heat HSS parts above 550°C (1,022°F).
     Verify heating temperature with a thermometer.
     (Crayon-type and other similar type thermometer are appropriate.)

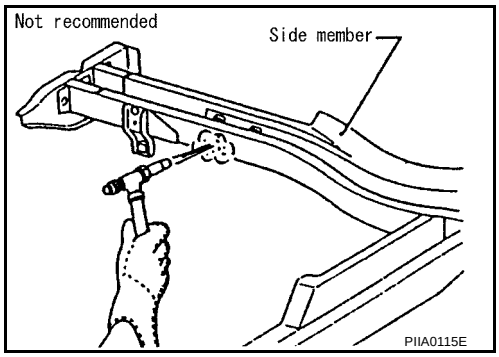


   - When straightening body panels, use caution in pulling any HSS panel. Because HSS is very strong, pulling may cause deformation in adjacent portions of the body. In this case, increase the number of measuring points, and carefully pull the HSS panel.

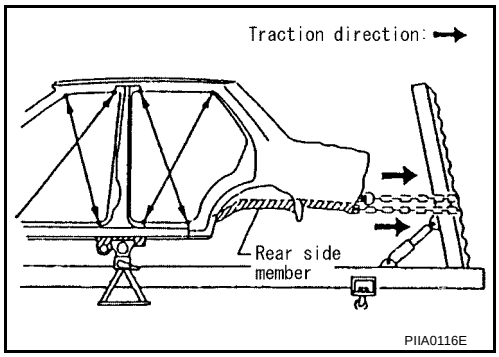


   - When cutting HSS panels, avoid gas (torch) cutting if possible. Instead, use a saw to avoid weakening surrounding areas due to heat. If gas (torch) cutting is unavoidable, allow a minimum margin of 50 mm (1.97in).

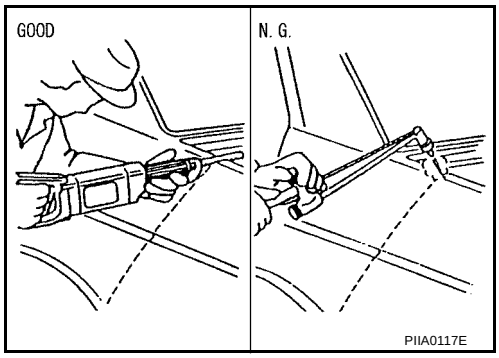

- When welding HSS panels, use spot welding whenever possible in order to minimize weakening surrounding areas due to heat.
  If spot welding is impossible, use M.I.G. welding. Do not use gas (torch) welding because it is inferior in welding strength.

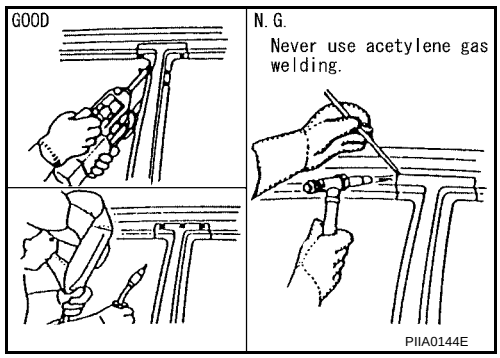


- The spot weld on HSS panels is harder than that of an ordinary steel panel.
  Therefore, when cutting spot welds on a HSS panel, use a low speed high torque drill (1,000 to 1,200 rpm) to increase drill bit durability and facilitate the operation.
- SP150 HSS panels with a tensile strength of 785 to 981 N/mm$^2$ (80 to 100 kg/mm$^2$ , 114 to 142 klb/sq in), used as reinforcement in the door guard beams, is too strong to repair. When these HSS parts are damaged, the outer panels also sustain substantial damage; therefore, the assembly parts must be replaced.

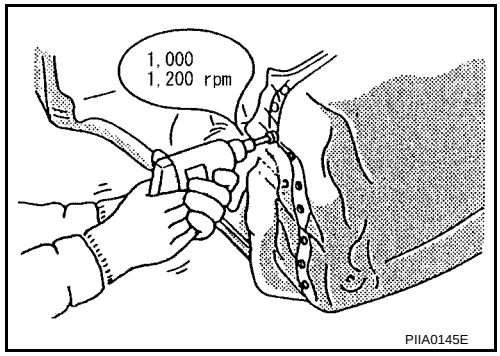


2. Precautions in spot welding HSS
   This work should be performed under standard working conditions. Always note the following when spot welding HSS:
   - The electrode tip diameter must be sized properly according to the metal thickness.

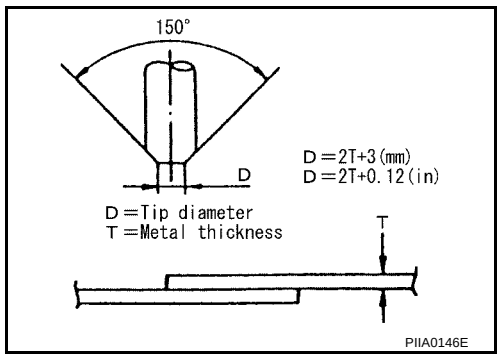


- The panel surfaces must fit flush to each other, leaving no gaps.

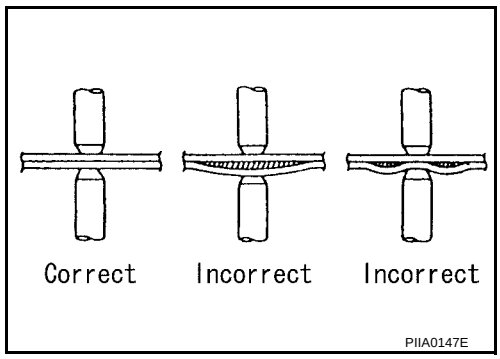

- Follow the specifications for the proper welding pitch.

Unit:mm

| Thickness (t) | Minimum pitch (ℓ) |
|---|---|
| 0.6 (0.024) | 10 (0.39) or over |
| 0.8 (0.031) | 12 (0.47) or over |
| 1.0 (0.039) | 18 (0.71) or over |
| 1.2 (0.047) | 20 (0.79) or over |
| 1.6 (0.063) | 27 (1.06) or over |
| 1.8 (0.071) | 31 (1.22) or over |

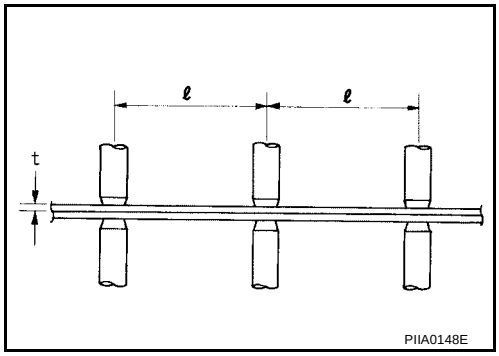

## Replacement Operations

EIS00478

### DESCRIPTION

This section is prepared for technicians who have attained a high level of skill and experience in repairing collision-damaged vehicles and also use modern service tools and equipment. Persons unfamiliar with body repair techniques should not attempt to repair collision-damaged vehicles by using this section.

Technicians are also encouraged to read Body Repair Manual (Fundamentals) in order to ensure that the original functions and quality of the vehicle can be maintained. The Body Repair Manual (Fundamentals) contains additional information, including cautions and warnings, that are not including in this manual. Technicians should refer to both manuals to ensure proper repairs.

Please note that this information is prepared for worldwide usage, and as such, certain procedures may not apply in some regions or countries.

The symbols used in this section for cutting and welding / brazing operations are shown below.

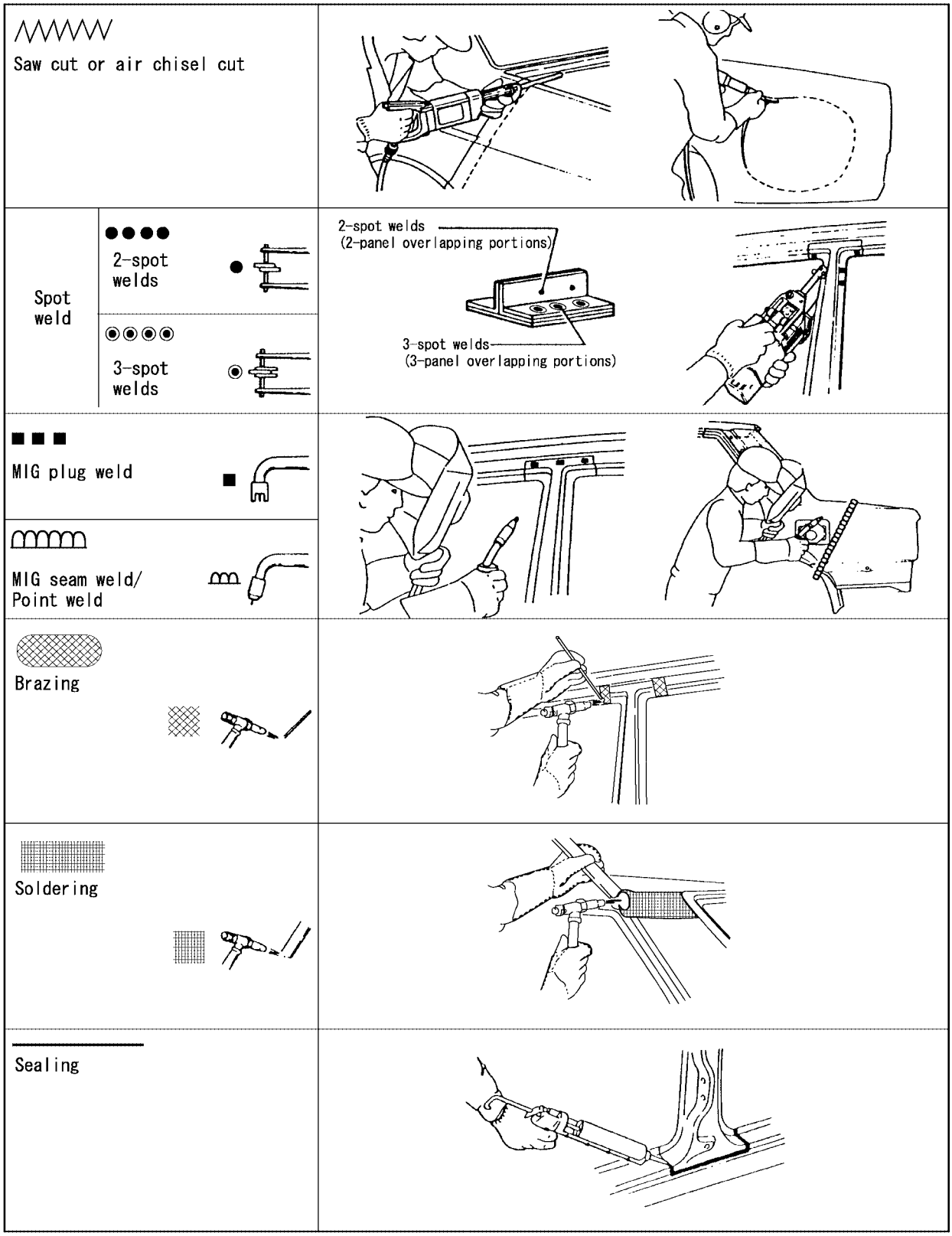


PIIA0149E

- Front pillar butt joint can be determined anywhere within shaded area as shown in the figure. The best location for the butt joint is at position A due to the construction of the vehicle. Refer to the front pillar section.

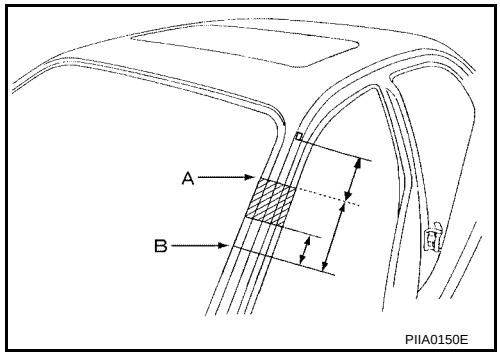


- Determine cutting position and record distance from the locating indent. Use this distance when cutting the service part. Cut outer front pillar over 60 mm above inner front pillar cut position.

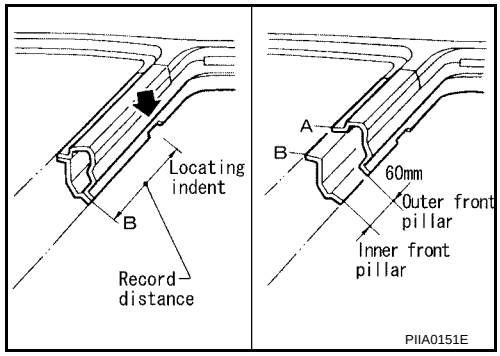


- Prepare a cutting jig to make outer pillar easier to cut. Also, this will permit service part to be accurately cut at joint position.

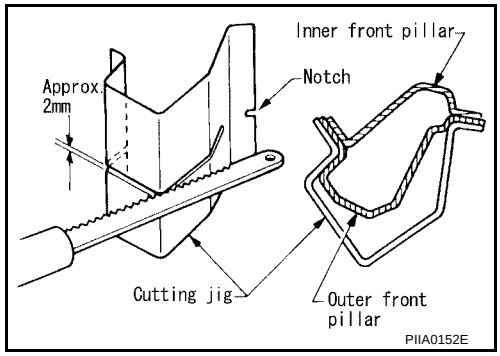


- An example of cutting operation using a cutting jig is as follows.

1. Mark cutting lines.
   A: Cut position of outer pillar
   B: Cut position of inner pillar
2. Align cutting line with notch on jig. Clamp jig to pillar.
3. Cut outer pillar along groove of jig. (At position A)
4. Remove jig and cut remaining portions.
5. Cut inner pillar at position B in same manner.

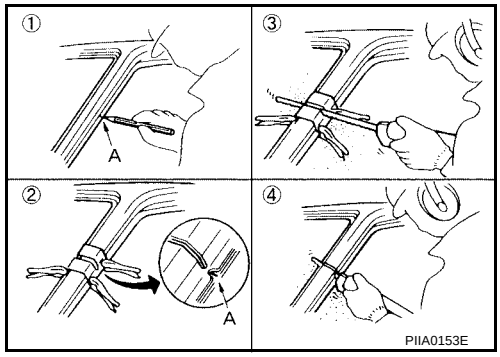

## HOODLEDGE

- Work after radiator core support has been removed.

### Service Joint

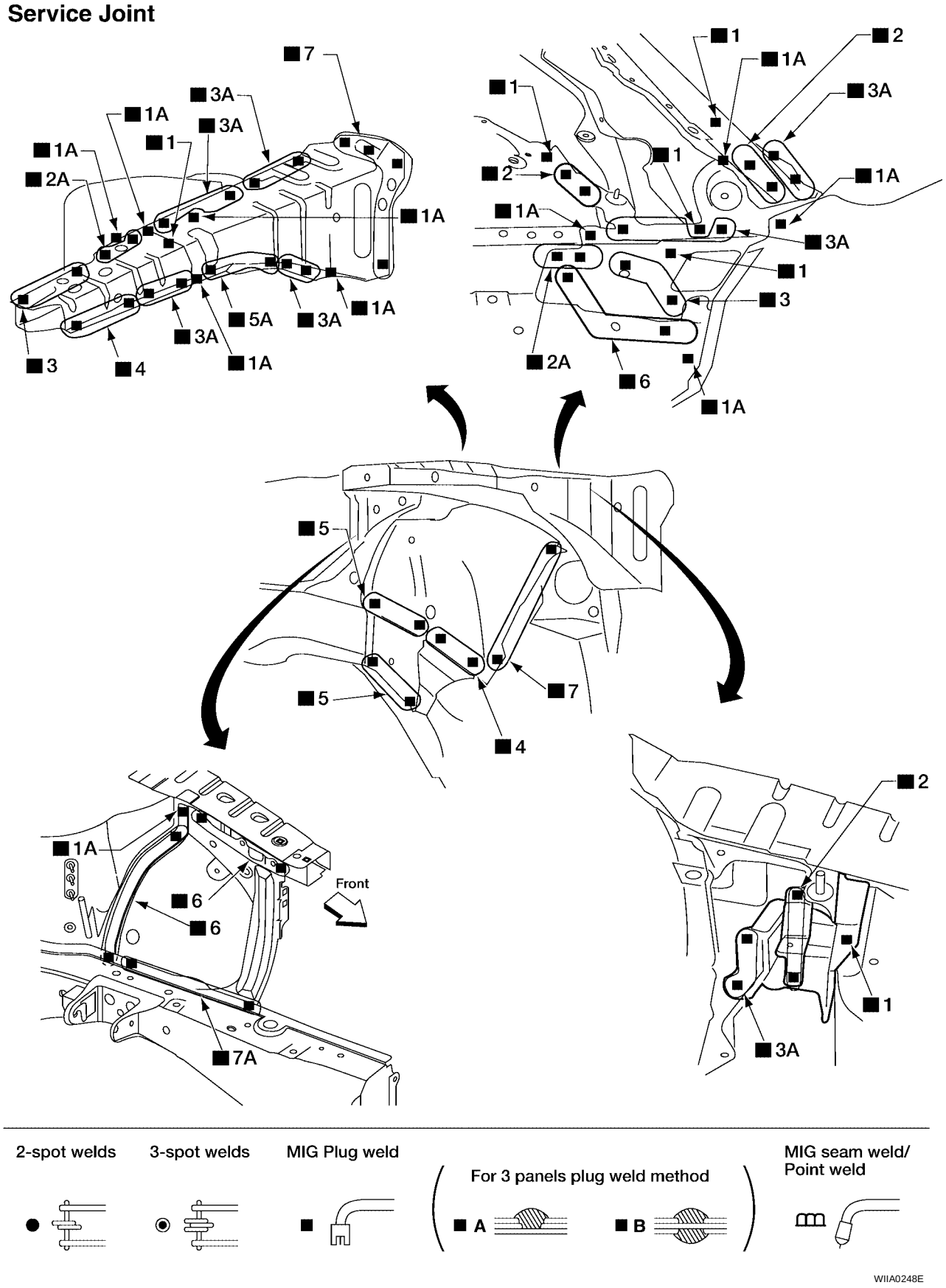

## HOODLEDGE (PARTIAL REPLACEMENT)

- Work after radiator core support has been removed.

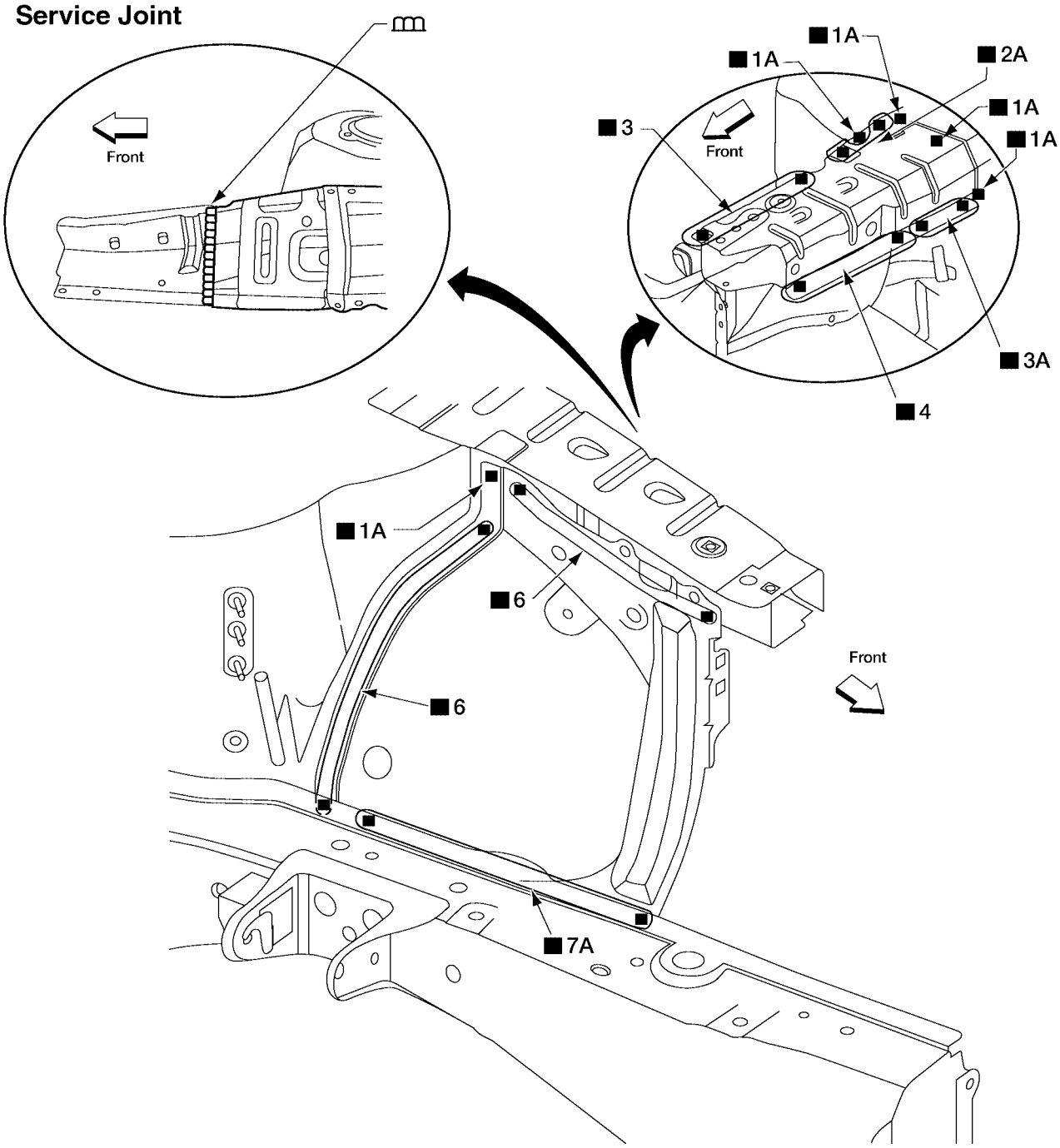


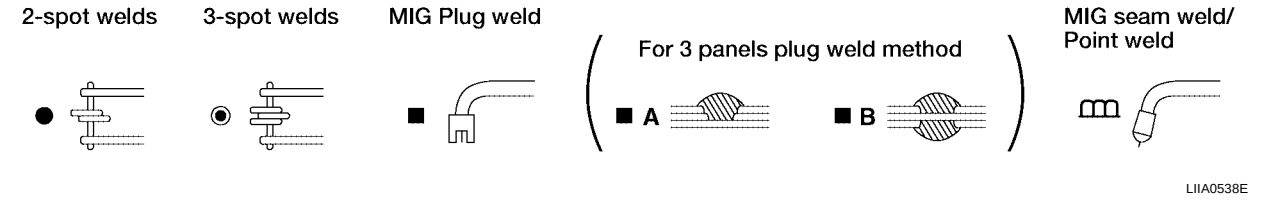

## FRONT SIDE MEMBER

- Work after hoodledge and radiator core support have been removed.

### Service Joint

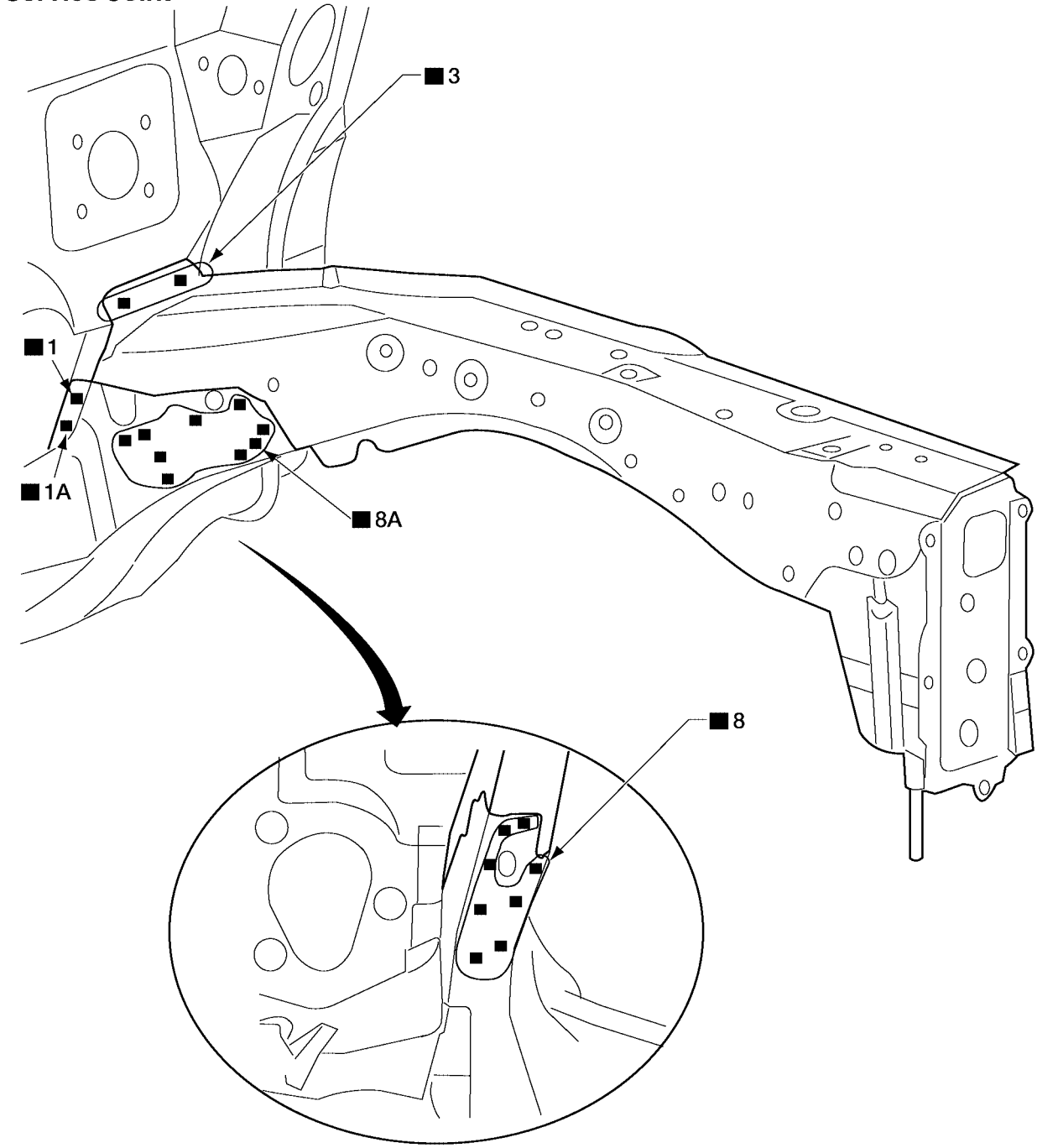


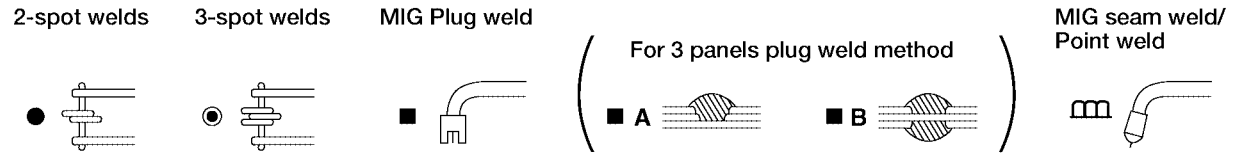


LIIA0539E

## FRONT SIDE MEMBER (PARTIAL REPLACEMENT)

- Work after radiator core support has been removed.

Service Joint

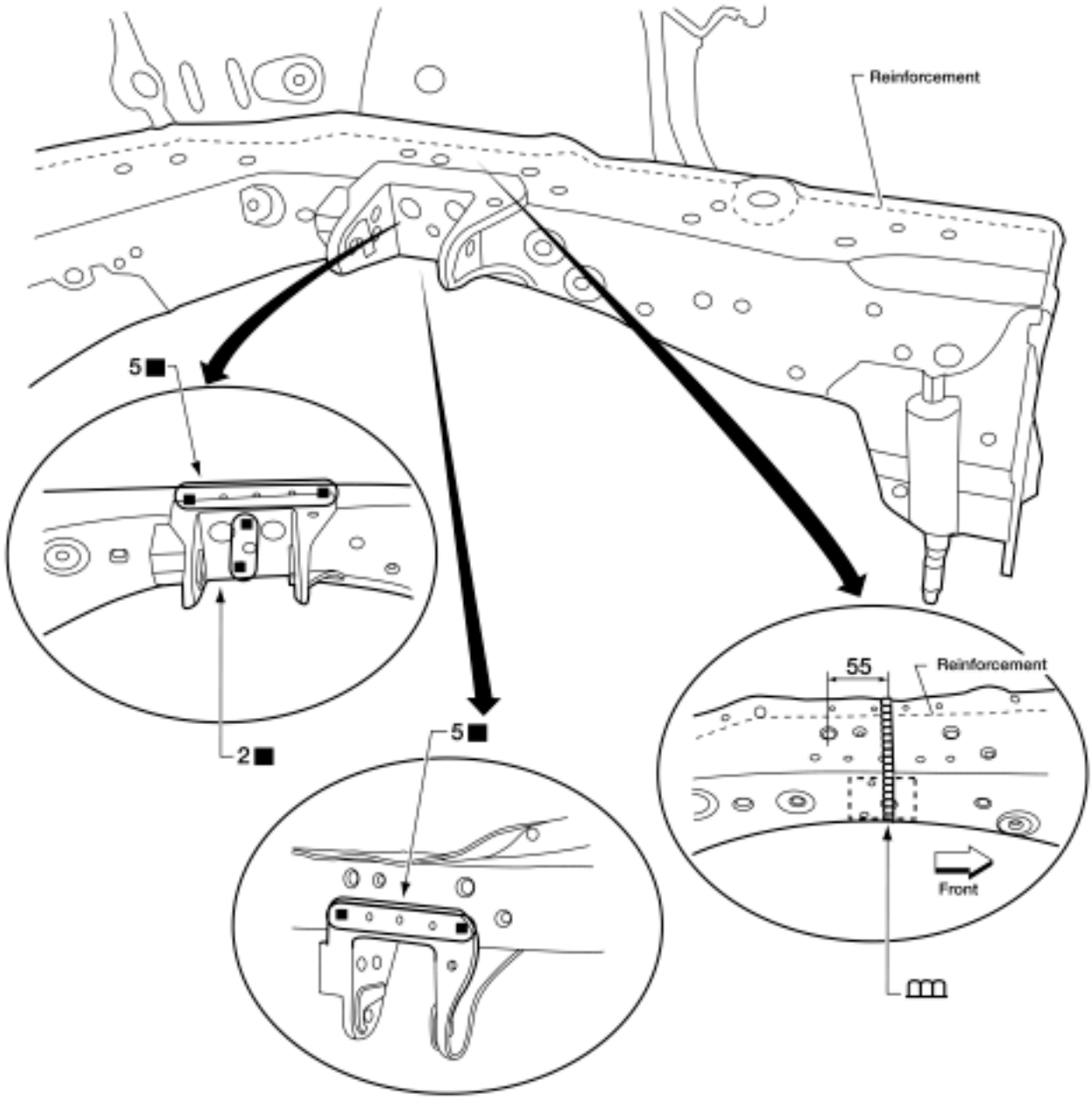


Unit: mm

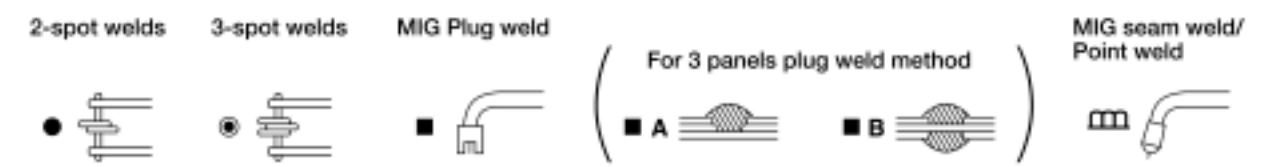


WIIA0481E

## FRONT PILLAR

- Work after rear hoodledge reinforcement has been removed.

### Service Joint

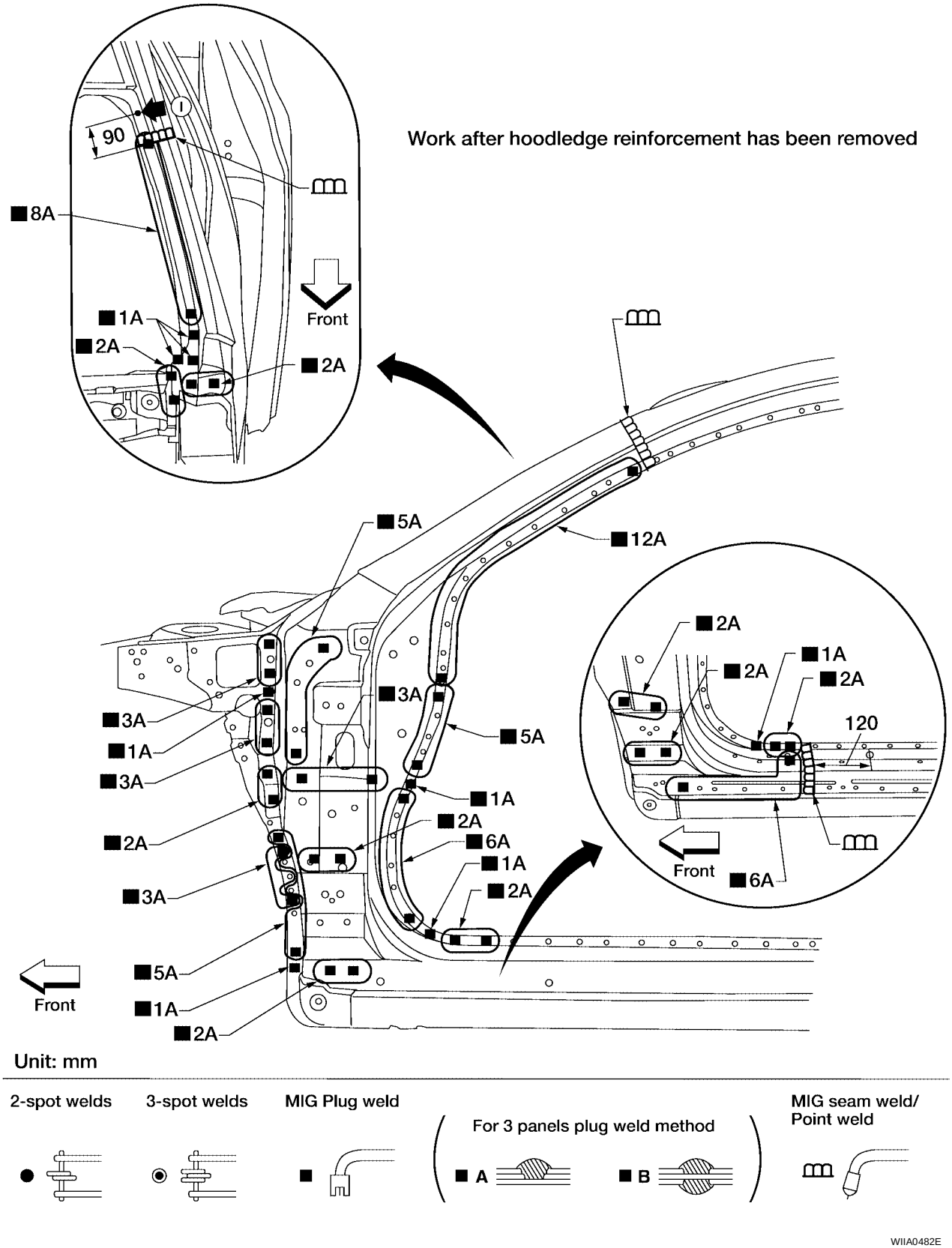

**Service Joint**

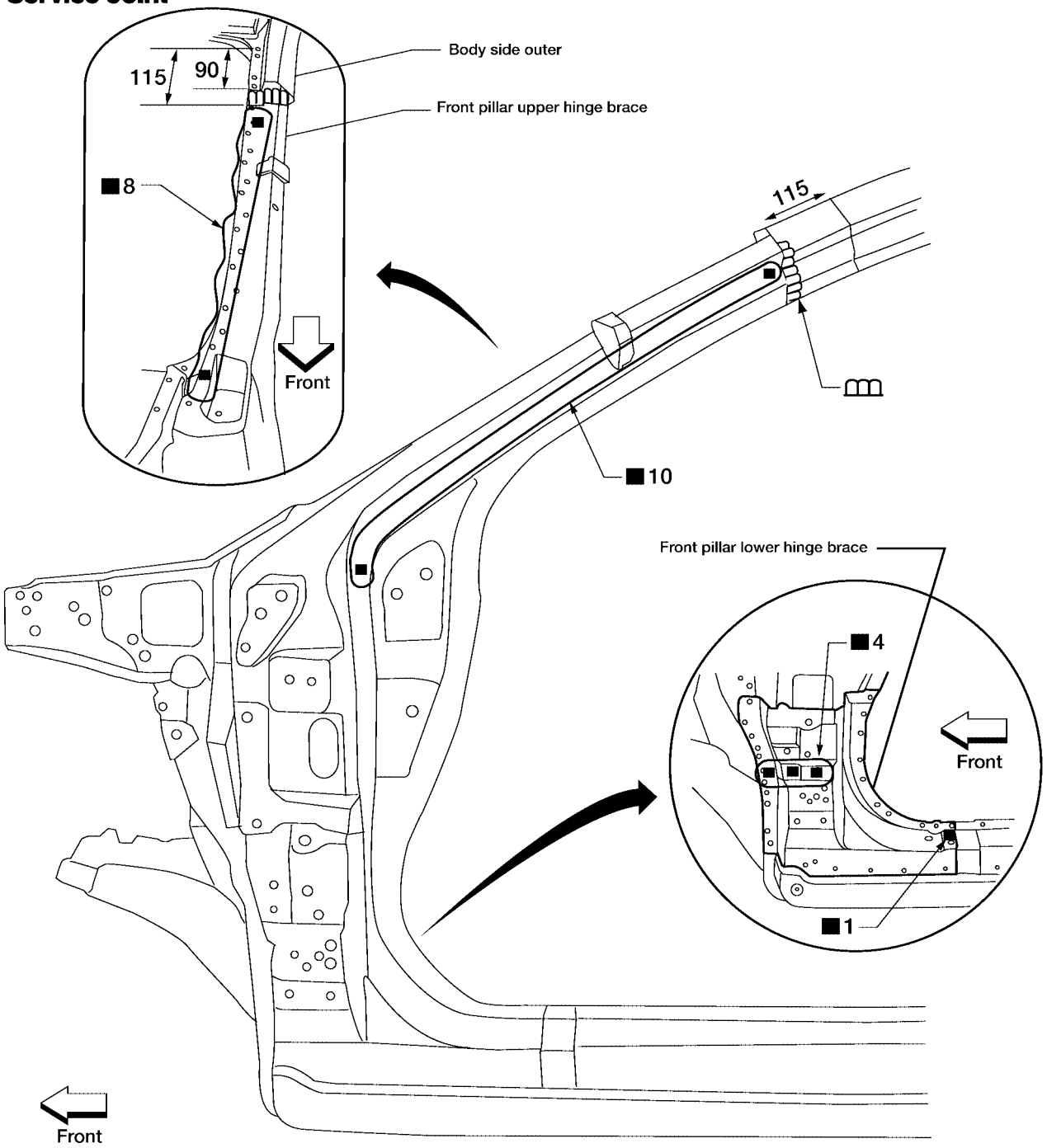


Unit: mm

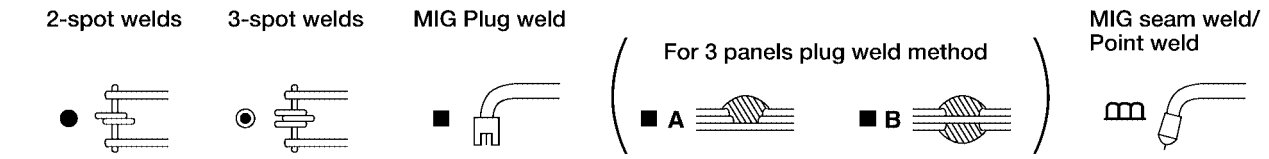


WIIA0491E

## Service Joint

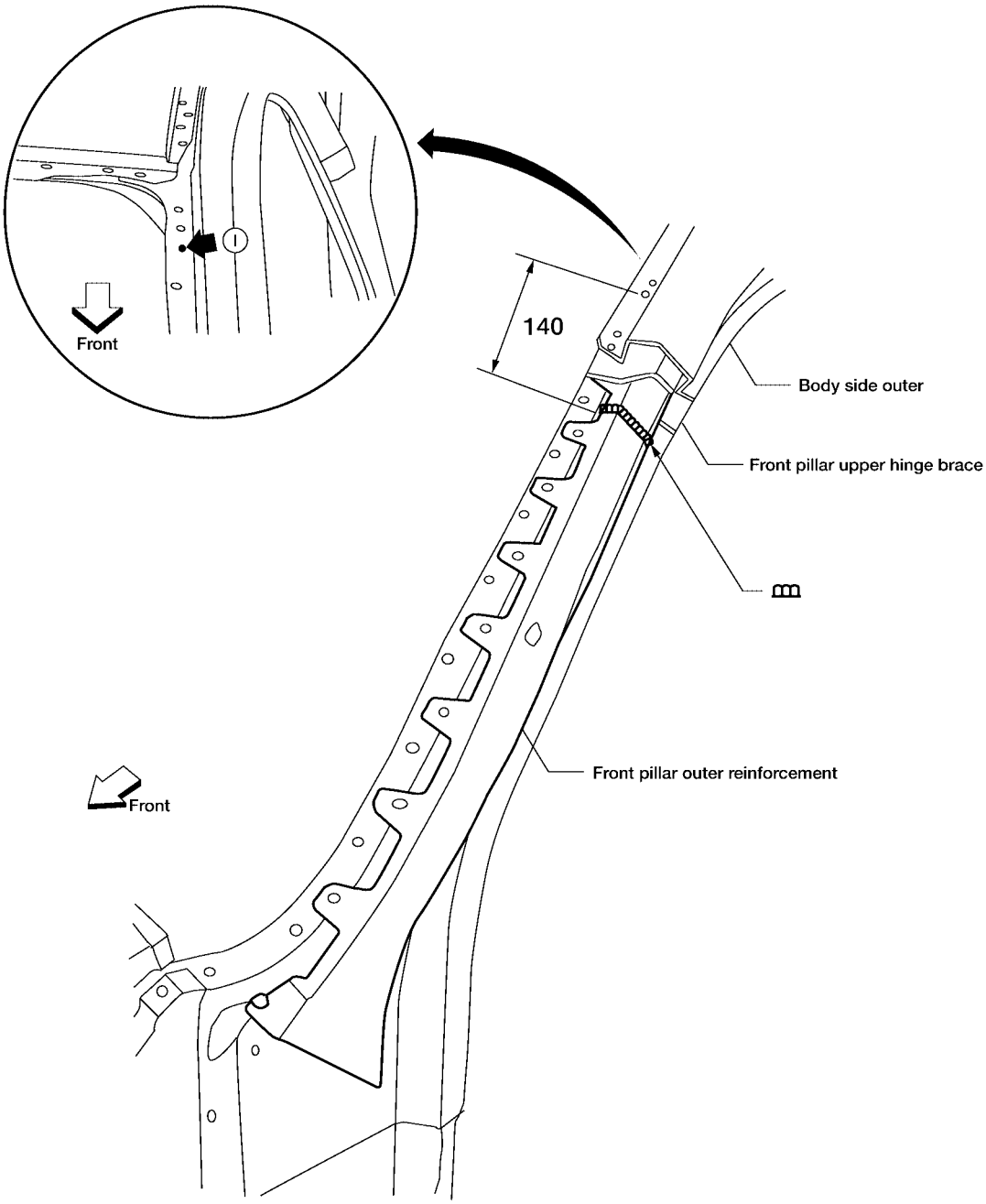


Unit: mm

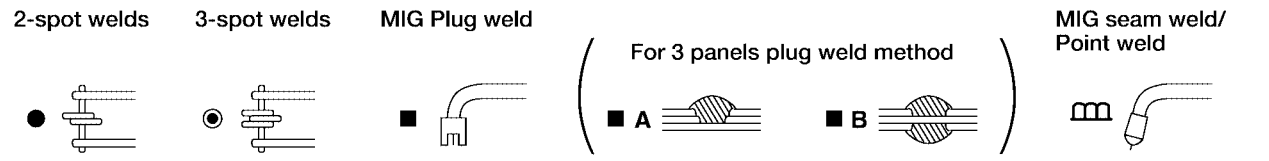


WIIA0483E

## Service Joint

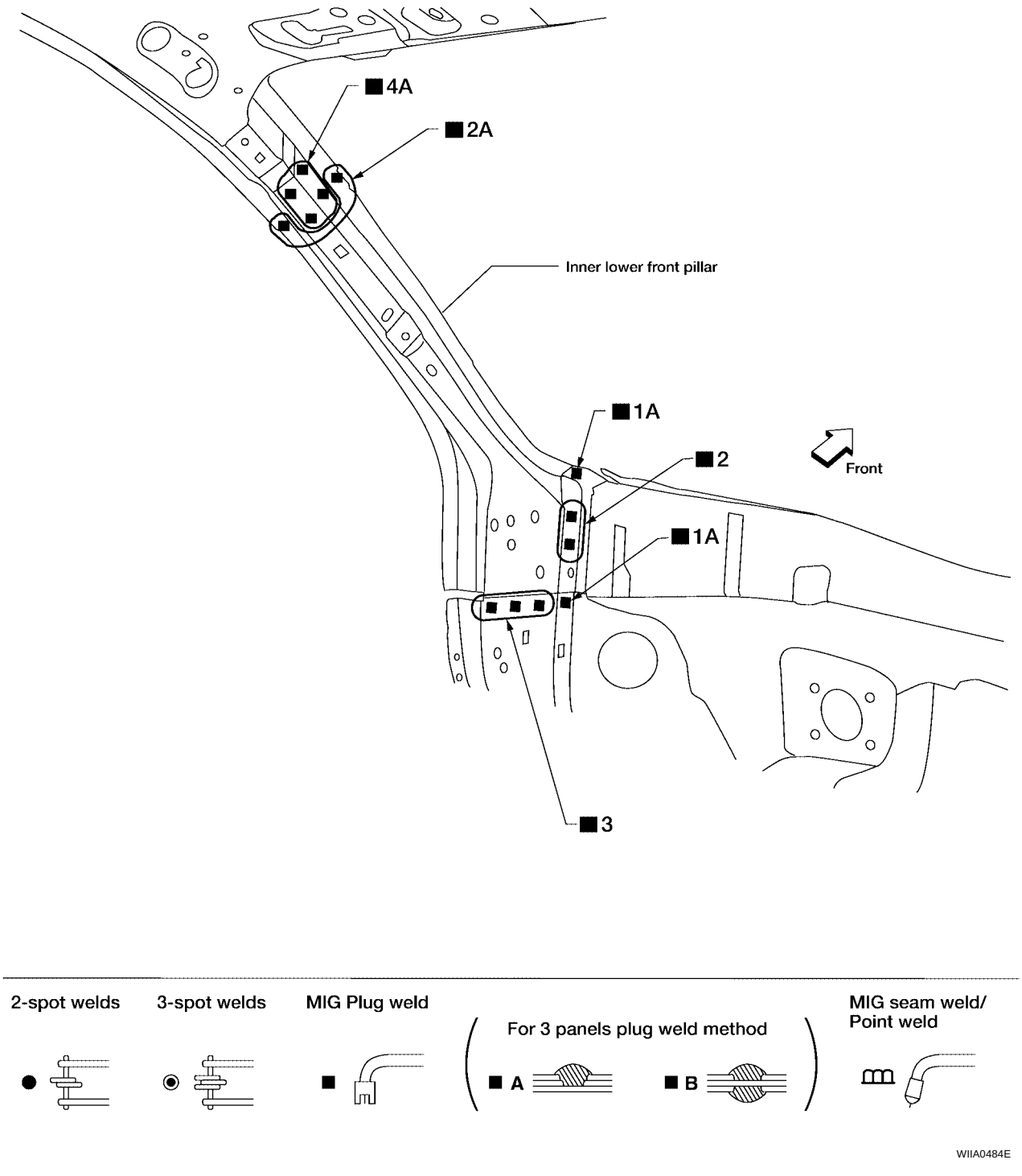

## CENTER PILLAR

### Service Joint

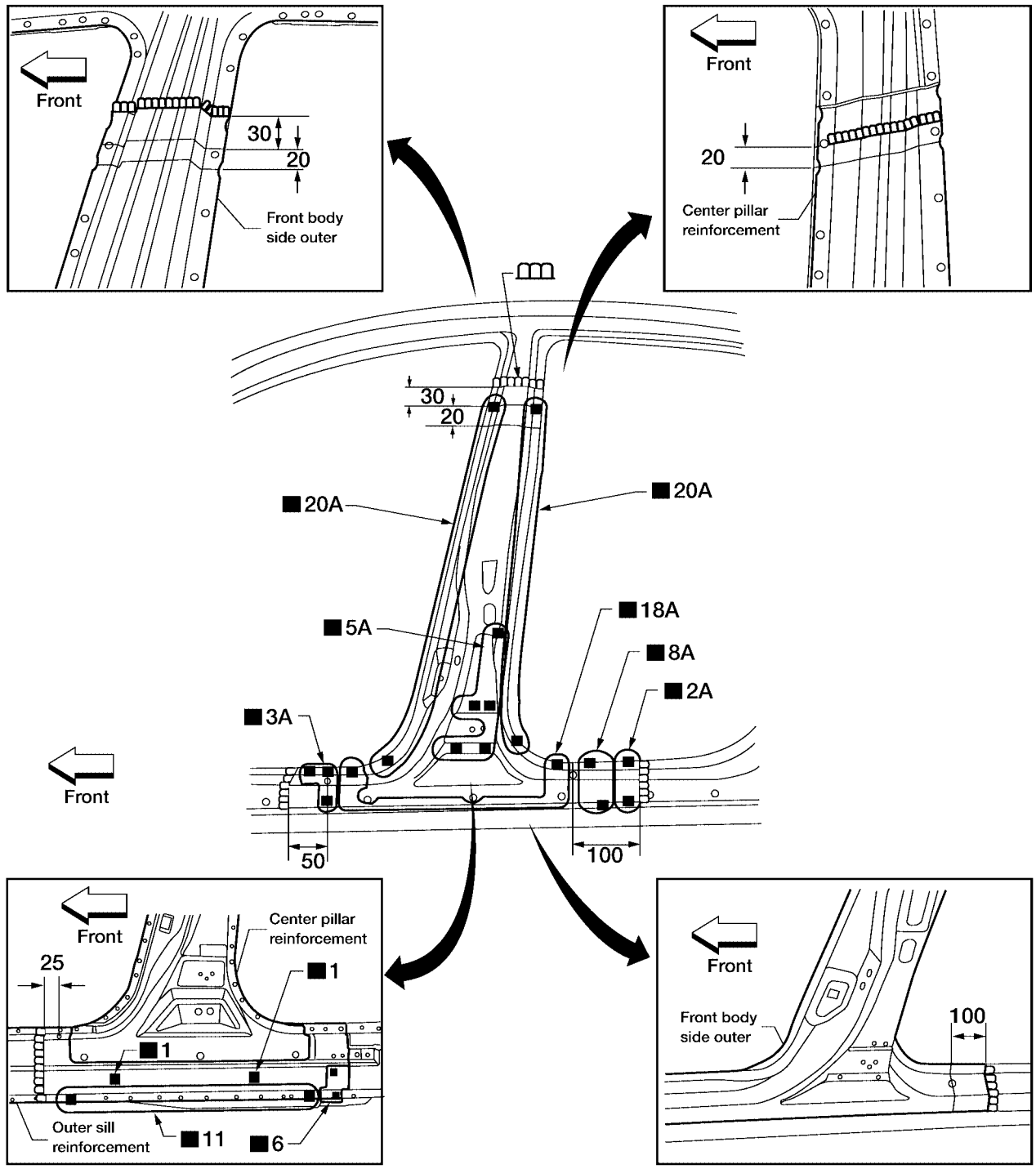


Unit: mm

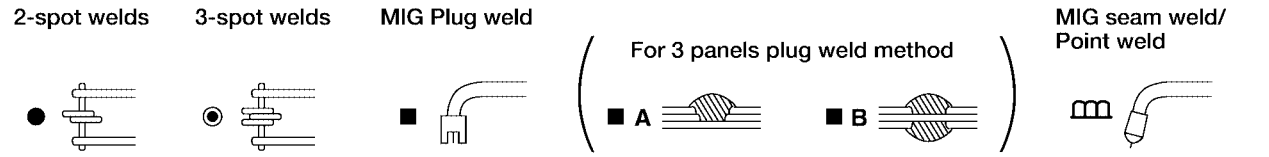


WIIA0485E

**Service Joint**

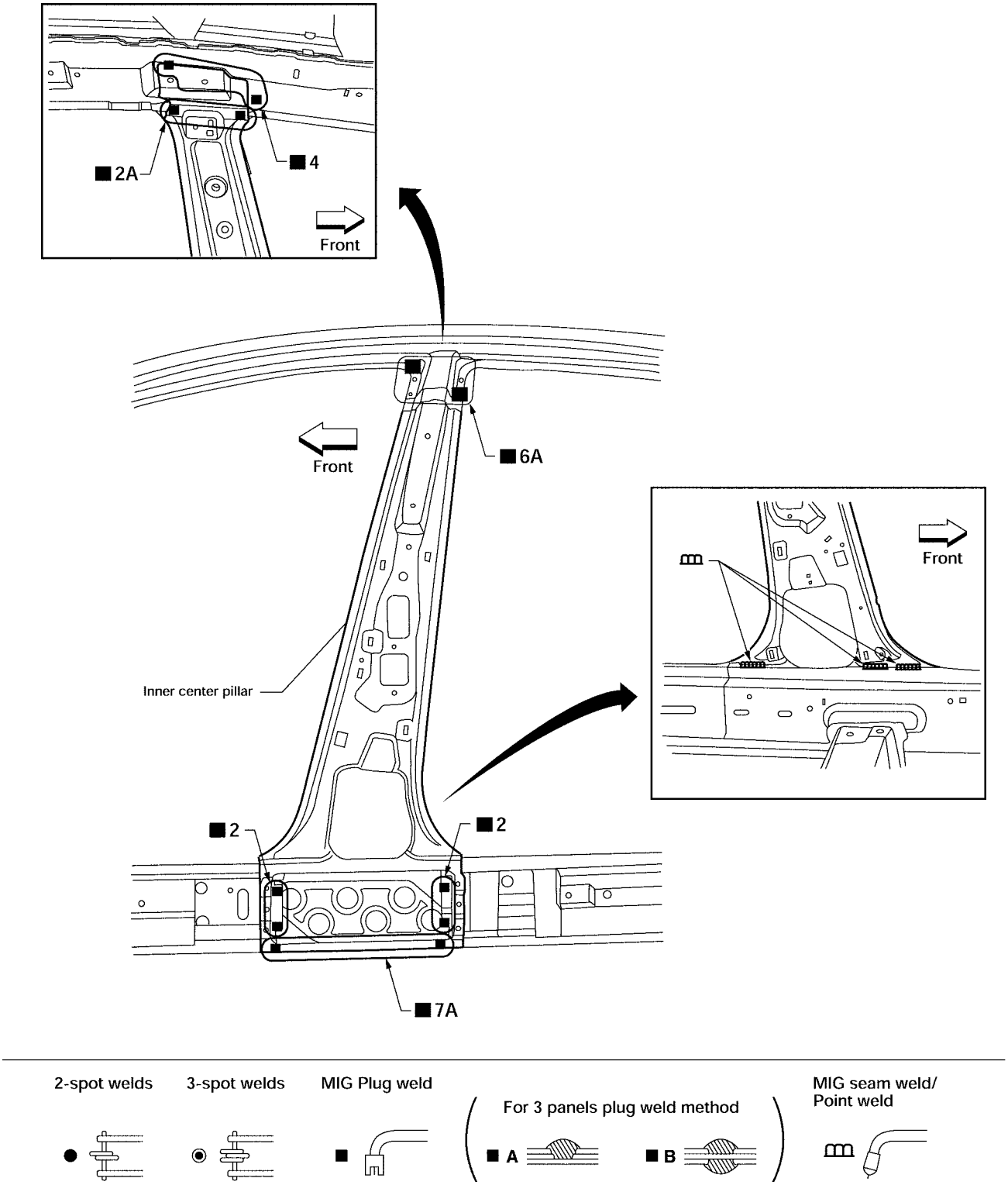

## OUTER SILL

### Service Joint

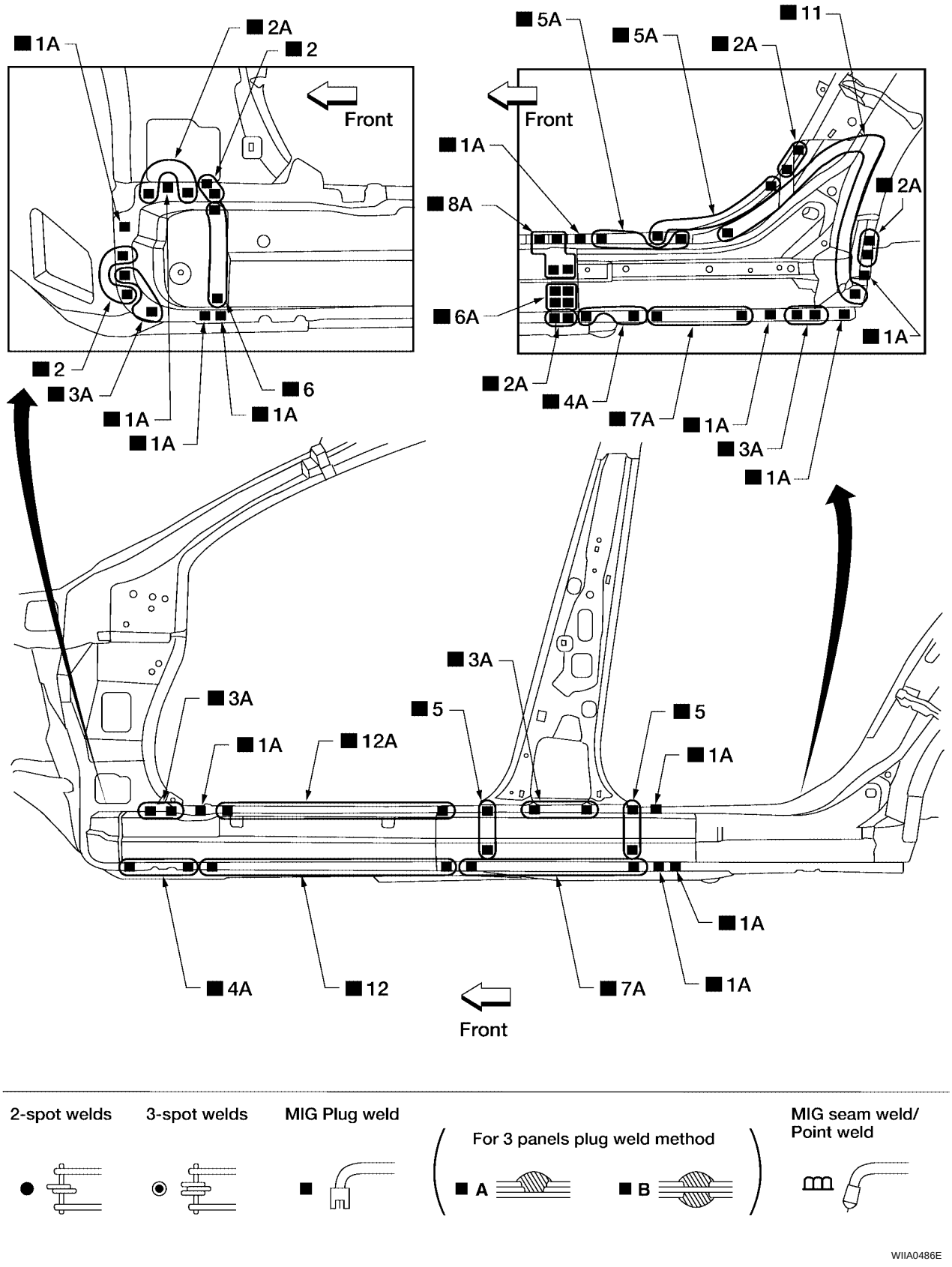

## REAR FENDER

### Service Joint

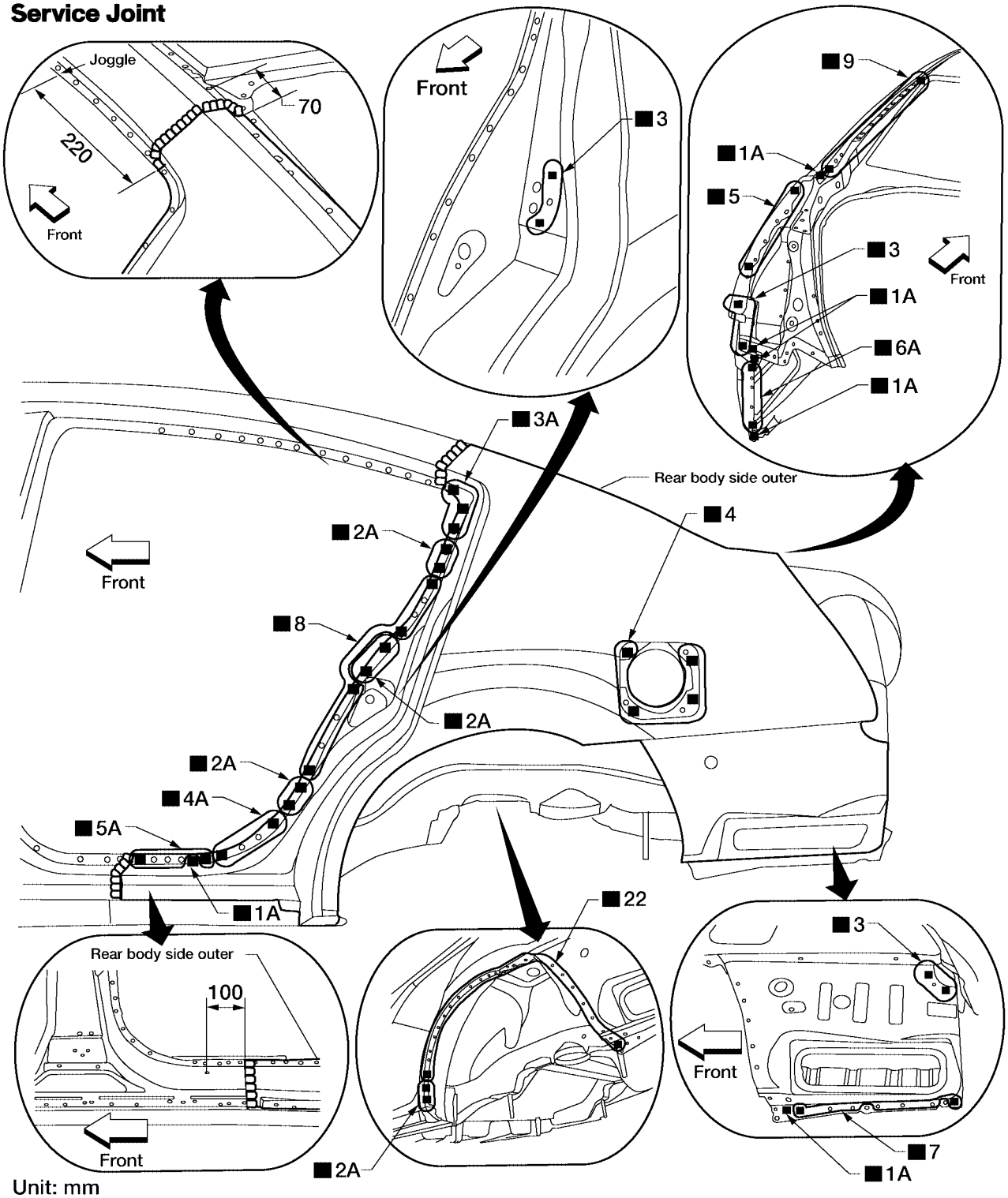


Unit: mm

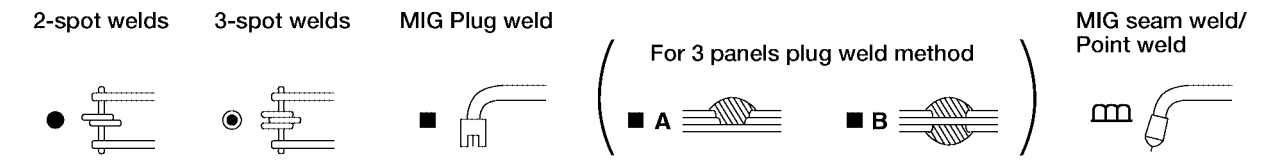


WIIA0389E

## REAR PANEL

### Service Joint

★ Indicates that there is an equivalent welding portion with the same dimensions on the opposite side

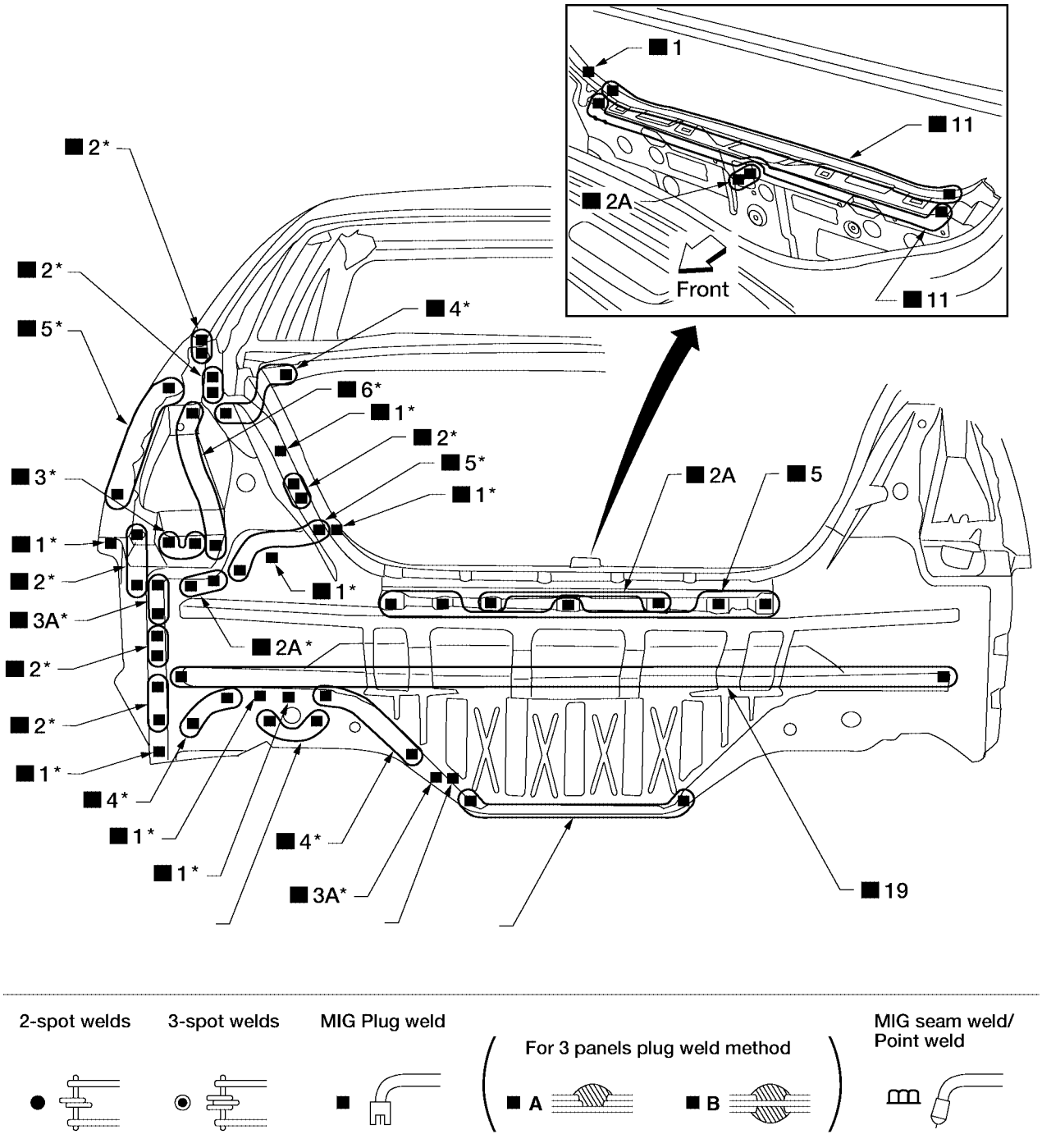


WIIA0390E

## REAR FLOOR REAR

- Work after rear panel has been removed.

### Service Joint

★ Indicates that there is an equivalent welding portion with the same dimensions on the opposite side

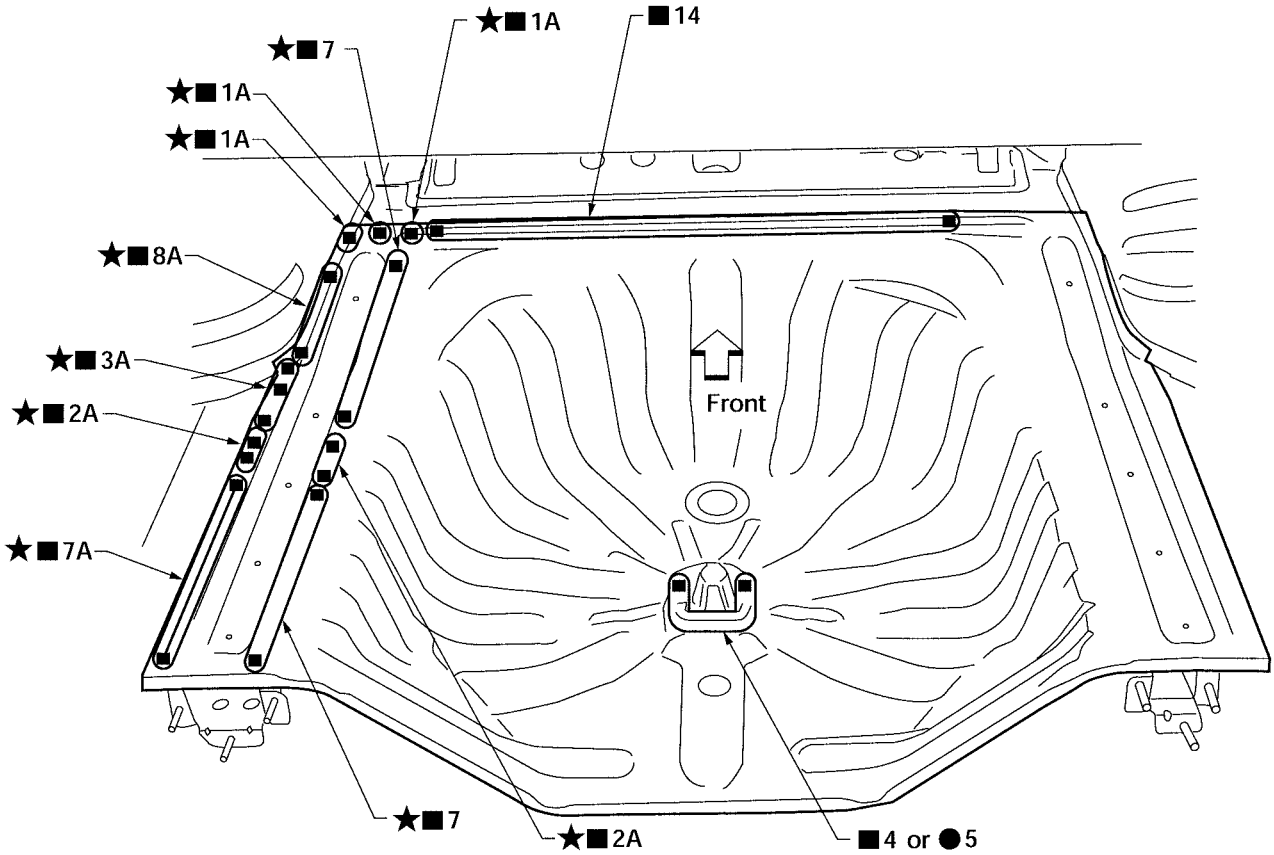


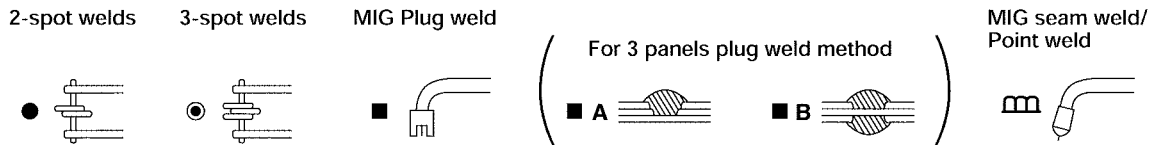


LIIA0536E

## REAR SIDE MEMBER EXTENSION

- Work after rear panel and rear end crossmember have been removed.

### Service Joint

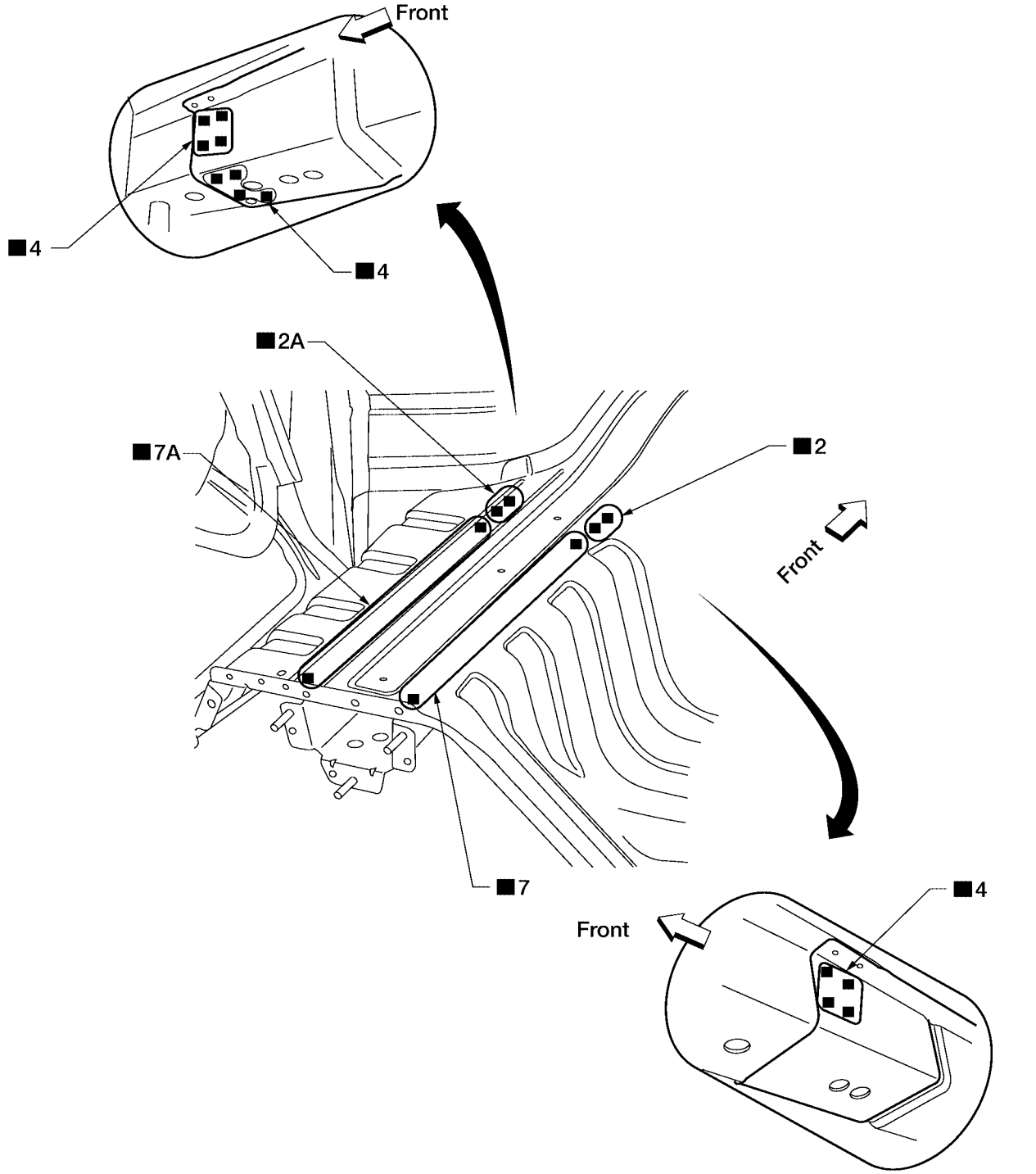


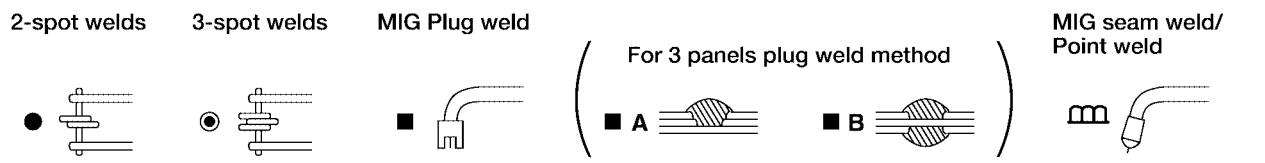


WIIA0487E